SAMPLE QUESTION PAPER
ENGLISH LANGUAGE AND LITERATURE (Code No. 184)
CLASS-X- (2024-25)

Time allowed: 3 Hrs. **Maximum Marks: 80**

General Instructions:

Read the instructions very carefully and strictly follow them:

1. *This question paper comprises 11 questions. All questions are compulsory.*
2. *The question paper contains THREE sections –*
   Section – A: Reading Skills
   Section – B: Grammar and Creative Writing Skills
   Section – C: Literature Textbook
3. *Attempt questions based on specific instructions for each Part.*

SECTION A
READING SKILLS (20 marks)

1. Read the following text. **10**

(1) Water is one of the most essential resources on Earth, yet it is often taken for granted. Despite its abundance, the reality is that only a small fraction of the world's water is fresh and available for human use. With increasing populations, climate change, and industrial demands, the pressure on our water resources is growing. This makes water conservation not just a collective responsibility but a crucial individual duty. Each person's effort towards conserving water can significantly impact the preservation of this vital resource for future generations

(2) One of the primary reasons individual water conservation efforts are so important is the cumulative effect of small actions which may seem trivial on their own. However, when multiplied by millions of people, these actions can lead to substantial water savings. For example, a single dripping tap can waste over 15 litres of water a day. Imagine the water saved if every household in a city repaired just one leaky faucet. This highlights the power of collective individual actions in reducing water waste.

(3) Moreover, personal efforts towards water conservation often lead to greater awareness and education. When individuals take steps to conserve water, they become more conscious of their water usage and the importance of this resource. This awareness can then spread within communities, inspiring others to adopt similar practices. For instance, a family that installs water-saving devices in their home may encourage neighbours and friends to do the same, creating a ripple effect. This grassroots approach to conservation can be particularly effective in areas where larger-scale initiatives may be slow to implement or lacking in support.

(4) In addition to daily habits, individuals can also make a difference through more significant lifestyle choices. For instance, opting for drought-resistant plants in gardens and supporting water-efficient agriculture can all contribute to water conservation. Agriculture, especially livestock farming, is one of the largest consumers of water globally. By supporting sustainable farming practices, individuals can indirectly reduce the water footprint of their food.

(5) Critics might argue that individual efforts are negligible compared to the large-scale water consumption by industries and agriculture. However, this perspective overlooks the potential for individual actions to drive systemic change. When people collectively make water-conscious choices, they send a powerful message to businesses and policymakers about the importance of conservation.

(6) Each person's commitment to saving water, no matter how small, contributes to a larger culture of sustainability. By making conscious choices and spreading awareness, individuals can help ensure that future generations have access to the clean, fresh water they need to thrive. Water conservation is not just the responsibility of governments and industries; it is a shared duty that begins with each of us.

Created for Academic Usage / 441 words

Answer the following questions, based on the passage above.

I In paragraph 1, what does the phrase 'each person's effort towards conserving water can significantly impact the preservation of this vital resource' emphasise? 1

II Complete the following with the correct option from the two given. 1

Water is often taken for granted, despite its essential nature because_____.

a) it is abundant and always easily accessible, making people less aware of its usage
b) its importance is not always recognised, leading people to overlook its value

(paragraph 1)

III Support the writer's idea that small individual actions towards water conservation are not trivial. 2

(paragraph 2)

IV Select the option that best reflects the concept of a 'ripple effect' in the context of student life at school. 1

a) A student's act of volunteering at a local charity leads to the school administration organising a large-scale fundraising event.

b) A student who consistently follows good study practices inspires classmates to improve their own study routines, creating a culture of academic excellence in the class. (paragraph 3)

V State whether the following statement is True or False. 1

(paragraph 3)

VI The writer mentions 'sustainable farming practices' in paragraph 4. 1
Which of the following is a sustainable farming practice?

A. Using chemical fertilizers and pesticides extensively to increase crop yields.
B. Clearing large areas of natural vegetation to expand farmland for organic farming.
C. Implementing crop rotation and using organic compost to maintain soil health.
D. Relying solely on monoculture farming to maximise production efficiency.

VII List any two points that a powerful message sent to businesses and policy makers about the importance of water conservation might include. (paragraph 5) 2

VIII Fill in the blank with the correct option from those given. (paragraph 6) 1
In the phrase ‘culture of sustainability,’ the word ‘culture’ refers to_____.

A. A set of beliefs and practices shared by a group
B. The artistic and traditional practices specific to a community's heritage.
C. The lifestyle habits and choices that are popular among the urbane
D. The techniques and methods used in development efforts

2. Read the following text. **10**

(1) A thorough study conducted across several villages of north-west India unveiled fascinating insights into the mural* landscape. It revealed that a significant majority, comprising around 80%, of these vibrant artworks are meticulously crafted by the villagers themselves. Approximately 15% of the murals stem from collaborative endeavours between villagers and local or visiting artists.

(2) Surprisingly, a small fraction, about 5%, of the murals are the result of sponsored initiatives, often commissioned by governmental or non-governmental organisations. These murals convey social messages ranging from education and environmental conservation to public health awareness.

(3) Among the locally crafted murals, nearly 55% depict scenes from mythology and folklore, celebrating the rich cultural heritage of the region. About 26 % of these murals showcase daily life in the villages, capturing moments of joy, struggle, and victory. The remaining 19% feature abstract or contemporary themes, reflecting evolving artistic expressions in rural settings.

(4) Further analysis reveals that among the locally crafted murals, nearly 63% are found on the walls of community centres, temples, and other public spaces. Around 27 % adorn the exterior walls of residential houses. The remaining 10% are scattered across schools, health centres, and other institutional buildings, serving as educational tools and sources of inspiration for the younger generation.

(5) To delve deeper, comparisons across various parameters such as demographic patterns, subject matter, techniques, community engagement, and impact are crucial. Analysing these facets not only provides a comprehensive understanding of mural creation in northwest Indian villages but also unveils avenues for cultural preservation, community development, and creative expression.

* a large painting or artwork that is typically created directly on a wall or ceiling

Created for academic usage/252 words

Answer the following questions, based on the passage above

I What does the use of the phrase 'fascinating insights' by the writer, in paragraph 1, tell us about their feelings? 1
A. The writer is expressing surprise.
B. The writer is conveying boredom and frustration.
C. The writer is indicating interest and enthusiasm.
D. The writer is showing disappointment.

II Select the option that is true for the assertion and reason given below. 1

Assertion: The murals in northwest Indian villages are meticulously crafted.
Reason: The murals are the result of collaborative endeavours.

A. Both the assertion and reason are true, and the reason is the correct explanation of the assertion.
B. Both the assertion and reason are true, but the reason is not the correct explanation of the assertion.
C. The assertion is true, but the reason is false.
D. The assertion is false, but the reason is true.

III Identify the word that indicates that the writer anticipated a higher percentage of sponsored initiative murals? 1

IV How do the murals in northwest Indian villages contribute to community engagement and awareness? 1

V Read the given prompt and select the correct option in the brackets to fill in the blank. 1

In Hari's village, a mural depicting sustainable farming practices is showcased on the Panchayat office wall.
The percentage of mural type that this would be counted in is. (26% / 19% / 55%)

VI What does the highest percentage of different mural themes suggest about the artistic preferences and cultural priorities in northwest Indian villages? 1

VII Complete the sentence suitably. 1

The significant presence of murals on the exterior walls of residential houses highlight.

VIII Complete the following with a suitable reason. 1

The most likely reason the writer believes that a mural can serve as an 'educational tool' is because it can _____.

IX In the context of the last paragraph, describe the significance of comparing various parameters such as demographic patterns, subject matter, techniques, community engagement, and impact in understanding the mural landscape in northwest Indian villages. 2

SECTION B: WRITING SKILLS & GRAMMAR (20 marks)

GRAMMAR 10

3. Complete ***any ten*** of twelve of the following tasks, as directed.

I Fill in the blank with the correct option to complete the opening line of a formal letter: 1

Dear Mr. Patel,
We are pleased to inform you that your proposal for the upcoming project by the board of directors_____.

A. had endorsed
B. will have been endorsed
C. has been endorsed
D. have endorsed

II Read the given sentence from a marketing report. Identify the error and supply the correction in the given format. 1

The company continues to strives tirelessly to meet customer demands.

ERROR	CORRECTION

III Rhea asked the following question to her colleague, Deepak. 1

Have you finalised the magazine content to be submitted tomorrow?

Report Rhea's question correctly

IV Fill in the blank by choosing the correct option, to complete an official announcement. 1

Attention all prefects,

Please be informed that the deadline for submitting your registrations for participation in the Art Exhibition has been extended; (that/ these/ this) should be communicated to all students of classes IX-X.

V Read Sana's reply to her team leader, regarding the preparation of an important presentation. 1

I'm sorry I forgot ma'am. I'll have the presentation ready for you very soon today.

Report Sana's reply by completing the following sentence correctly.

Sana apologised for having forgotten and said .

VI Identify and correct the error in the given line taken from an online news report: 1

Nearly most shop was closed for the public holiday.

Option No.	Error	Correction
A	most	every
B	shop	shops
C	was	were
D	the	that

VII Complete the given school announcement by selecting the correct option to fill in the blank. 1

Good news, everyone!

Our school's robotics team has successfully_____a place in the semi-finals.

A. securing
B. secured
C. will secure
D. had secured

VIII Detect the error and supply the correction for the given observation by a child. 1

That needn't be Dad's jacket. It's too small.

ERROR	CORRECTION

IX Report the dialogue between a teacher and a student, by completing sentence. 1

Teacher: Did everyone understand the new assignment?
Students: Yes, we all got it, thank you!

The teacher asked if everyone had understood the new assignment, to which the students_____, expressing their gratitude.

X Select the correct option to complete the given sentence from a handbook for managers. The manager_____consider the proposal before making a decision. 1

A. will
B. should
C. might
D. can

XI Complete the given sentence about the reaction of some friends, by selecting the correct option: 1

The group of friends_____excited at the prospect of their upcoming adventure.

A. are
B. has
C. is
D. were

XII Read the conversation about social media, between a teacher and a student 1

Teacher: How do you think social media influences our perceptions of reality?
Jagrit: I believe it distorts our perception of reality by only showing the highlight reels of people's lives.
Report the student's response by completing the following.
The student remarked_____by only showing the highlight reels of people's lives.

WRITING

NOTE: *All details presented in the questions in writing section are imaginary and created for assessment purpose.*

4A You are Nirmal Pillai, a concerned citizen from Aluva, Kochi. Compose a letter in about 120 words, to the Project Head of the E-Waste Management Cell at Electronics Vatika, New Delhi, highlighting the adverse effects of e-waste* pollution. Suggest measures for addressing its management through community engagement and government initiatives.

* Discarded electronic devices such as smartphones, computers, and televisions, which are no longer in use or have reached the end of their lifecycle.

OR

4B You are Chhavi Pathak of Ranchi, Bihar. Write a letter in about 120 words addressing the Secretary of the City Municipal Authority. Detail the problem of overgrown trees and shrubs in the neighbourhood and request the delegation of personnel for regular pruning.

5A Read the product details on a label for a school bag:

ECO-FRIENDLY SCHOOL BAG

1. Made from recycled materials
2. Ergonomic* design with padded shoulder straps and breathable mesh back panel
3. Spacious main compartment with multiple pockets and organisers
4. Reflective strips for visibility and safety
5. Water-resistant fabric
6. Available in various vibrant colours and patterns

Now, analyse why this school bag would be a beneficial purchase. Write the analytical paragraph in 120 words, considering factors such as its eco-friendliness, comfort features, functionality, safety aspects, and design options.

* Design that is intended to maximise comfort, efficiency, and safety for the user

OR

5B Read the given details of a playground intended for your resident area. **5**

- A central climbing structure inspired by traditional Indian architecture, such as a miniature fort, with multiple levels and slides.
- Swings adorned with colorful Indian patterns, along with monkey bars and a zip line.
- A water play feature inspired by Indian fountains or rivers
- Shaded seating areas with benches and swings, resembling traditional *chaupals* or gazebos.
- Trees, shrubs, and flower beds
- Ample open space

Analyse the details and write an analytical paragraph in about 120 words about the suitability of this playground.

Focus on factors such as safety, inclusivity, fun features, suitability for different age groups, and overall experience.

SECTION D: LITERATURE TEXTBOOK (40 marks)

6 Read the given extracts and answer **any one** of the two questions given below **5**

A With a loud scream he fell outwards and given downwards into space. Then a monstrous terror seized him and his heart stood still. He could hear nothing. But it only lasted a minute. The next moment he felt his wings spread outwards. The wind rushed against his breast feathers, then under his stomach, and against his wings. He could feel the tips of his wings cutting through the air. He was not falling headlong now. He was soaring gradually downwards and outwards. (His First Flight) 1

I What effect does the experience, as described in the lines below, have on the baby seagull? 1

With a loud scream he fell outwards and downwards into space. Then a monstrous terror seized him and his heart stood still.

Chose the most suitable option.

A. exhilarates
B. overwhelms
C. energises
D. confuses

II How does the author's use of descriptive language enhance the narrative technique in the paragraph? 2

III Fill in the blank with the correct word from the bracket. 1
The use of the word ‘rushed’ adds to a sense of_____(speed / relief), in the extract

IV How does the seagull's feelings towards the end of the extract contrast with the initial feeling of terror? 1

B And suddenly Bholi noticed that the teacher was standing by her side, smiling at her. “What’s your name, little one?”
“Bh-Bho-Bho-.” She could stammer no further than that.
Then she began to cry and tears flowed from her eyes in a helpless flood. She kept her head down as she sat in her corner, not daring to look up at the girls who, she knew, were still laughing at her. When the school bell rang, all the girls scurried out of the classroom, but Bholi dared not leave her corner. Her head still lowered, she kept on sobbing.
“Bholi.”
The teacher’s voice was so soft and soothing! In all her life she had never been called like that. It touched her heart. (Bholi)

I What is the tone the teacher is UNLIKELY to have used in the line, ‘“What’s your name, little one?”.' 1
A. reassuring
B. comforting
C. settling
D. calming

II How does the author's use of Bholi 's perspective help build the narrative in the extract? 2

III Fill in the blank with the correct word from the bracket. 1
The word ‘flood’ in the line ‘...tears flowed from her eyes in a helpless flood.’ Indicates that Bholi was crying_____(uncontrollably / unintentionally).

IV How does the teacher's comforting demeanour contrast with the behaviour of the other girls in the classroom? 1

7 Read the given extracts and answer the questions for ***any one*** of the two, given. **5**

A He stalks in his vivid stripes
The few steps of his cage,
On pads of velvet quiet,
In his quiet rage. (Tiger in the Zoo)

I What is the most likely reason the poet chooses to say 'vivid' stripes instead of just stating the colours of the stripes?

II Fill the blank with ONE word.

The tiger's stalking suggests a movement that is_____within the confines of its cage.

III How does the poet reinforce the contrast between the tiger's confined environment and its internal emotions?

IV Select the option that applies the same rhyme scheme as the lines of the given extract. **5**

A. This bird so small and sweet,
Sings aloud in the morn,
Perched on a branch green,
Chirp, chirp, tweet, tweet.

B. Perched on a branch green,
This bird so sweet and lean,
Sings aloud in a voice sweet,
Chirp, chirp, tweet, tweet.

C. This bird sings without a care,
sweet Perched on a branch green,
A song with the world to share,
With its feelings so keen.

D. This bird so small and
Sings aloud in the morn
Perched on a green branch
Singing its own melody

B Belinda paled, and she cried Help! Help!
But Mustard fled with a terrified yelp,
Ink trickled down to the bottom of the household,
And little mouse Blink strategically mouseholed.

(*The Tale of Custard the Dragon*)

I Examine the portrayal of Blink in the given lines. 2

II Complete the following suitably. 1

The word 'paled' implies that Belinda_____.

III What kind of picture is painted by the poet through the line, 'Ink trickled down to the bottom of the household'? 1

IV What kind of atmosphere is created through these lines? 1

Select the correct option
1. Urgency 2. Apprehension 3. Uncertainty 4. mystery 5. Aggression

A. 1 and 4
B. Only 2
C. 1, 2 and 3
D. 4 and 5

8 Answer ***any four*** of the following five questions, in about 40-50 words. **4x3=12**

I How does the ignorance about Mijbil as a creature in the urban environment of London reveal insights about people's perceptions and knowledge regarding animals? (Mijbil the Otter) 3

II How does the imagery of the trees' movement from the house to the forest, in 'Trees', reflect broader themes of liberation and growth in human experiences? 3

III What does the postmaster's reaction to Lencho's letter reveal about his character? (A Letter to God) 3

IV Assess the narrative's effectiveness in portraying the tension between the comfort of familiarity and the allure of the unfamiliar in 'Madam Rides the Bus'. 3

V Summarise the role of the use of parentheses in the poem 'Amanda!'. 3

9 Answer ***any two*** of the following three questions, in about 40-50 words. **2x3=6**

I How does Matilda's desire for material wealth drive the plot of 'The Necklace'? 3

II Justify the opinion that Ebright's early successes were essential for his later achievements in science. (The Making of a Scientist) 3

III How does 'The Book that Saved the Earth' include elements of satirical science fiction? 3

10 Answer **any one** of the following two questions, in about 100-120 words **6**

I Both poems 'Dust of Snow' and 'Fire and Ice' use contrasting elements of nature to convey their respective messages about life and human emotions but they do it differently. Examine these differences.

II Both the texts, 'For Anne Gregory' and 'The Sermon at Benares,' grapple with the idea that external attributes are fleeting and subject to decay. Examine the similarities.

11 Answer ***any one*** of the following two questions, in about 100-120 words. **6**

I Evaluate how Griffin's character is shaped by a combination of personal ambition, the unintended consequences of his scientific pursuits, and the reactions of the society he faces.

II Evaluate how James Herriot's characterisation contributes significantly to the overarching theme of responsible pet ownership and animal welfare.

प्रतिदर्श प्रश्नपत्र 2024-25

कक्षा-दसवीं हिन्दी-ब (कोड 085)

निर्धारित समय: 3 घंटे **अधिकतम अंक : 80**

सामान्य निर्देश-

- इस प्रश्नपत्र में चार खंड हैं – क, ख, ग और घ
- खंड क में अपठित गदयांश से प्रश्न पूछे गए हैं, जिनके उत्तर दिए गए निर्देशों का पालन करते हुए दीजिए ।
- खंड ख में व्यावहारिक व्याकरण से प्रश्न पूछे गए हैं, आंतरिक विकल्प भी दिए गए हैं।
- खंड ग पाठ्यपुस्तक पर आधारित है, निर्देशानुसार उत्तर दीजिए।
- खंड घ रचनात्मक लेखन पर आधारित है आंतरिक विकल्प भी दिए गए हैं।
- प्रश्न पत्र में कुल 16 प्रश्न हैं, सभी प्रश्न अनिवार्य है।
- यथासंभव सभी खंडों के प्रश्नों के उत्तर क्रमशः लिखिए।

प्रश्न सं.	खंड-क (अपठित बोध)	अंक
1.	निम्नलिखित गदयांश को ध्यानपूर्वक पढ़ कर पूछे गए प्रश्नों के उत्तर लिखिए-	7
	दुनिया में इस समय दिन दूनी, रात चौगुनी गति से प्रगति हो रही है। कुछ समय पहले तक असंभव सी लगने वाली चीज़ें आज प्रौद्योगिकी की मदद से सरलता से परिणाम तक पहुँच रही हैं। एक समय संगणक के विकास ने प्रौद्योगिकी के क्षेत्र में क्रांतिकारी बदलाव किया था। अब कृत्रिम बौद्धिकता ने चिकित्सा से लेकर हथियारों के निर्माण तक हर क्षेत्र में कंप्यूटर और रोबोट के प्रयोग को नया आयाम दिया है। पारंपरिक कंप्यूटर की दुनिया में इस प्रगति के समानांतर एक और अनुसंधान चल रहा है, जिसका नाम है 'क्वांटम कंप्यूटिंग' यानि अति-सूक्ष्मता का विज्ञान। भारत ने भी अब इस क्षेत्र में गति लाने का ऐलान कर दिया है। भौतिक-शास्त्र के क्वांटम सिद्धांत पर काम करने वाली इस कंप्यूटिंग में असीमित संभावनाएं देखी जा रही हैं। शोध के लिहाज से यह विषय किसी के लिए भी रुचि का विषय हो सकता है। विशेषज्ञों के अनुसार एक पूर्ण विकसित क्वांटम कंप्यूटर की क्षमता सुपर कंप्यूटर से भी ज्यादा आँकी जा रही है। इस क्वांटम कंप्यूटिंग या मेकैनिक्स	

	की खास बात यह है कि इसकी शुरुआत के बाद भारतीय और पश्चिमी वैज्ञानिक यह मान रहे हैं कि भारतीय भाववादी सिद्धांत को जाने बिना कण में चेतना का आकलन नहीं किया जा सकता। क्वांटम भौतिकी और कृत्रिम बौद्धिकता एक तरह से चेतना के भाववादी सिद्धांत को ही अस्तित्व में लाने के उपाय हैं।	
(क)	उपर्युक्त गदयांश किस विषयवस्तु आधारित है ? i. कृत्रिम बौद्धिकता पर ii. दुनिया के विकास पर iii. संगणक के प्रयोग पर iv. मानव अस्तित्व पर	1
(ख)	दिन दूनी, रात चौगुनी गति से प्रगति हो रही है- पंक्ति से आशय है ? i. बहुत ही तेजी से विकास ii. रात दिन काम करना iii. चारों तरफ विकास होना iv. बहुत अधिक विकास होना	1
(ग)	निम्नलिखित कथन और निष्कर्ष को ध्यान से पढ़कर दिए गए विकल्प से सही उत्तर चुनकर लिखिए – कथन – क्वांटम कंप्यूटर की क्षमता सुपर कंप्यूटर से भी अधिक है। निष्कर्ष – इससे विकास की गति को अधिक बल मिलेगा । i. कथन सही है लेकिन निष्कर्ष गलत है। ii. कथन और निष्कर्ष दोनों सही हैं। iii. कथन गलत है और निष्कर्ष सही है। iv. कथन और निष्कर्ष दोनों गलत हैं।	1
(घ)	जीवन को सरल बनाने में प्रोद्योगिकी की भूमिका को स्पष्ट कीजिए	2
(ङ)	अति-सूक्ष्मता का विज्ञान क्या है?	2
2.	सूरज हमारी ऊर्जा की सारी कमियों को पूरा कर सकता है। यह एक विशाल रिएक्टर जैसा है। वैज्ञानिकों का प्रयास है कि कृत्रिम सूरज को धरती पर बनाया जाए। इसके लिए ये फ्यूजन तकनीक पर काम कर रहे हैं। सूर्य की चमक इन्सानों के लिए हजारों साल से आश्चर्य की वजह रही है। लेकिन करीब सौ साल पहले नई खोज द्वारा पता चला कि सूर्य की बेशुमार ऊर्जा का कारण न्यूक्लियर फ्यूजन है। फिर वैज्ञानिकों ने सोचा कि अगर धरती पर उसी तरह का फ्यूजन कराया जाए जो सूर्य में हो रहा है तो बहुत कुछ बदल जाएगा और लोगों को	7

	बेशुमार ऊर्जा मिल जाएगी। आज दुनिया के सबसे बड़े न्यूक्लियर फ्यूजन रिएक्टर में ईंधन परीक्षण को शुरू कर दिया गया है। वैज्ञानिकों की एक टीम फ्रांस में फ्यूजन रिएक्टर को ताकत देने के लिए हयड्रोजन के एक अत्यंत दुर्लभ रूप की क्षमता का परीक्षण कर रहे हैं। अगर उनका यह परीक्षण सफल होता है तो इससे दुनिया को क्लीन एनर्जी का एक बहुत बड़ा जरिया मिल जाएगा। इससे न केवल जीवाश्म इंधनों पर निर्भरता घटेगी, बल्कि पर्यावरण को भी लाभ होगा। न्यूक्लियर फ्यूजन लंबे समय तक वातावरण में मौजूद रहने वाले रेडियोधर्मी अपशिष्ट उत्पन्न नहीं करता। यह अक्षय ऊर्जा से भी अधिक विश्वसनीय ऊर्जा स्रोत है। नाभिकीय संलयन द्वारा उत्पन्न ऊर्जा मानवजाति की लंबे समय से चली आ रही खोजों में सबसे महत्वपूर्ण है, क्योंकि यह तुलनात्मक रूप से काफी स्वच्छ है। अर्थात यह कम कार्बन का उत्सर्जन करती है, साथ ही यह तकनीकी दक्षता के साथ सौ फीसदी स्वच्छ भी है ।	
(क)	उपर्युक्त गदयांश की विषय-वस्तु है ? i. सौर ऊर्जा ii. स्वच्छ ऊर्जा iii. नाभिकीय ऊर्जा iv. रेडियोधर्मी ऊर्जा	1
(ख)	निम्नलिखित कथन (A) तथा कारण (R) को ध्यानपूर्वक पढ़िए । दिए गए विकल्पों में से कोई एक सही विकल्प चुनकर लिखिए: कथन (A) – न्यूक्लियर फ्यूजन सौर ऊर्जा से भी विश्वसनीय ऊर्जा स्रोत है । कारण (R) – इससे दुनिया को स्वच्छ ऊर्जा प्राप्त होगी। i. कथन (A) सही है,कारण (R)गलत है ii. कथन (A) तथा कारण (R) दोनों गलत हैं। iii. कथन (A) सही है , और कारण (R) उसकी सही व्याख्या है। iv. कथन (A) गलत है किन्तु कारण (R) सही है।	1
(ग)	वैज्ञानिकों द्वारा कृत्रिम सूरज को धरती पर बनाने के पीछे कारण है – i. ऊर्जा की कमी दूर करने के लिए ii. पर्यावरण के लाभ के लिए iii. प्राकृतिक ऊर्जा संग्रह के लिए iv. फ्यूजन तकनीक को सिद्ध करने के लिए	1
(घ)	सूर्य को असीमित ऊर्जा का स्त्रोत क्यों माना जाता है ?	2
(ङ)	नाभिकीय ऊर्जा जीवाश्म ईंधनों से किस प्रकार भिन्न है ?	2

	खंड-ख (व्यावहारिक व्याकरण)	
3.	पदबंध' पर आधारित पाँच प्रश्नों में से किन्हीं चार प्रश्नों के उत्तर लिखिए –	4x1=4
(क)	वज़ीर अली की जांबाजी और साहसिक कारनामों से सभी परिचित थे- वाक्य में से विशेषण पदबंध चुनकर लिखिए।	1
(ख)	किसी वाक्य में संज्ञा पदबंध की पहचान कैसे की जा जाती है, उदाहरण देकर स्पष्ट कीजिए।	1
(ग)	<u>सबकी सहायता करने वाले आप</u> आज उदास क्यों हैं – वाक्य में रेखांकित पदबंध का भेद लिखिए।	1
(घ)	मैं खेलते-कूदते कक्षा पास कर लेता हूँ – वाक्य में पदबंध का भेद बताते हुए कारण भी स्पष्ट कीजिए।	1
(ङ)	क्रिया पदबंध का एक उदाहरण देकर वाक्य में प्रयोग कीजिए।	1
4.	'रचना के आधार पर वाक्य रूपांतरण' पर आधारित पाँच प्रश्नों में से किन्हीं चार प्रश्नों के उत्तर लिखिए –	4x1=4
(क)	'दादा को तार देने के सिवा तुम्हें और कुछ न सूझेगा'- वाक्य का भेद लिखिए।	1
(ख)	भीड़ की अधिकता के कारण पुलिस जूलुस को रोक नहीं सकी – संयुक्त वाक्य में रूपांतरित कीजिए।	1
(ग)	उदाहरण द्वारा सरल एवं मिश्र वाक्य में अंतर स्पष्ट कीजिए।	1
(घ)	संयुक्त वाक्य में समुच्चयबोधक अव्यय की भूमिका स्पष्ट कीजिए।	1
(ङ)	गायन इतना प्रभावी था कि वह अपनी सुध-बुध खोने लगा – वाक्य का भेद बताते हुए कारण स्पष्ट कीजिए।	1
5.	'समास' पर आधारित पाँच प्रश्नों में से किन्हीं चार प्रश्नों के उत्तर लिखिए –	4x1=4
(क)	सामासिक पद अन्य व्याकरणिक पदों से किस प्रकार भिन्न होता है?	1
(ख)	तत्पुरुष समास में पूर्व पद और उत्तर पद की भूमिका स्पष्ट कीजिए।	1
(ग)	'यथाशक्ति' अव्ययीभाव समास है कैसे?	1
(घ)	'त्रिलोकीनाथ' सामासिक पद का विग्रह करते हुए भेद लिखिए।	1
(ङ)	द्विगु समास की विशेषता बताते हुए एक उदाहरण दीजिए।	1
6.	'मुहावरे' पर आधारित पाँच प्रश्नों में से किन्हीं चार प्रश्नों के उत्तर लिखिए –	4x1=4

(क)	भारतीय प्रशासनिक सेवा में चयनित होने के लिए..... करनी पड़ती है। (उपयुक्त मुहावरे द्वारा रिक्त स्थान की पूर्ति कीजिए।)	1
(ख)	समुद्र किनारे शाम को ततांरा रोज वामीरो की..... था। (उपयुक्त मुहावरे द्वारा रिक्त स्थान की पूर्ति कीजिए।)	1
(ग)	शैलेंद्र का मुरझाया हुआ चेहरा देखकर राज कपूर ने मुस्कराते हुए कहा, "निकालो एक रुपया, पारिश्रमिक पूरा एडवांस।" पंक्ति से मुहावरा चुनकर वाक्य में प्रयोग कीजिए।	1
(घ)	'काम तमाम कर देना और धूल में मिला देना मुहावरे में अंतर स्पष्ट कीजिए।	1
(ङ)	'निराशा के बादल फटना' मुहावरे का वाक्य बनाइए।	1
	खंड ग **(पाठ्यपुस्तक)**	
7.	निम्नलिखित गद्यांश को पढ़ कर पूछे गए प्रश्नों के उत्तर सर्वाधिक उचित विकल्प से चुनकर लिखिए-	5x1=5
	मदालसा भी पकड़ी गई थी। उससे मालूम हुआ कि उसको थाने में भी मारा गया था। सब मिलाकर 105 स्त्रियाँ पकड़ी गई थीं। बाद में रात को नौ बजे सबको छोड़ दिया गया। कलकता में आज तक इतनी स्त्रियाँ एक साथ गिरफ्तार नहीं की गई थी। करीब आठ बजे खादी भंडार आए तो कांग्रेस ऑफिस से फोन आया कि यहाँ बहुत आदमी चोट खाकर आए हैं और कई की हालत संगीन है उनके लिए गाडी चाहिए। जानकी देवी के साथ वहाँ गए, बहुत लोगों को चोट लगी हुई थी। डॉ दास गुप्ता उनकी देख-रेख तथा फोटो उतरवा रहे थे। उस समय तक 67 आदमी वहाँ आ चुके थे। बाद में तो 103 तक आ पहुंचे।	
(क)	मदालसा को थाने में भी मारा गया था- इस कथन से अंग्रेजी शासन की किस मानसिकता का पता चलता है? i. स्त्रियों पर हिंसा ii. दमनकारी नीति iii. बदले की भावना iv. अंग्रेजों की क्रूरता	1
(ख)	'सब मिलाकर 105 स्त्रियाँ पकड़ी गई थी' कथन से निष्कर्ष निकलता है कि---	1

	i. आंदोलन में पुरुषों की संख्या कम थी। ii. पुलिस स्त्रियों को अधिक गिरफ्तार कर रही थी। iii. मोनुमेट पर स्त्रियाँ आगे की पंक्ति में थी। iv. आंदोलन में स्त्रियों ने बढ़-चढ़ कर हिस्सा लिया था।	
(ग)	इस गदयांश का सूत्रधार आप किसे मानते है ? i. पूर्णोदास ii. मदालसा iii. सीताराम iv. जानकी देवी	1
(घ)	यहाँ बहुत आदमी चोट खाकर आए हैं और कई की हालत संगीन है – पक्ति में 'संगीन' का अर्थ है– i. गंभीर ii. घायल iii. मूच्छित iv. नाजुक	1
(ङ)	निम्नलिखित कथन (A) तथा कारण (R) को ध्यान से पढिए तथा सर्वाधिक उचित विकल्प को चुन कर लिखिए : कथन (A) – डॉ दास गुप्ता उनकी देख–रेख तथा फोटो उतरवा रहे थे। कारण (R) वे आंदोलन के बारे में साक्ष्य एकत्रित कर रहे थे। i. कथन (A) तथा कारण (R) दोनों गलत है ii. कथन (A) तथा कारण (R) दोनों सही है iii. कथन (A) गलत है तथा कारण (R) सही है iv. कथन (A) सही है लेकिन कारण (R) उसकी गलत व्याख्या करता है	1
8.	**गद्य खंड पर आधारित निम्नलिखित प्रश्नों में से किन्हीं तीन प्रश्नों के उत्तर लगभग 25–30 शब्दों में लिखिए –**	3X2=6
(क)	'मेरे देखते तुम बेराह न चलने पाओगे' – पंक्ति से बड़े भाई के कर्तव्य और अधिकार का पता कैसे चलता है?	2
(ख)	'जीवन में पहली बार मैं इस तरह विचलित हुआ हूँ' – तताँरा ने ऐसा क्यों कहा होगा ?	2
(ग)	शैलेंद्र ने राज कपूर की भावनाओं को शब्द दिए हैं, कैसे ?	2
(घ)	सआदत अली खाँ में देशप्रेम का अभाव था, स्पष्ट कीजिए।	2
9.	**निम्नलिखित काव्यांश को पढ़कर प्रश्नों के सर्वाधिक उपयुक्त विकल्पों का चयन कीजिए–**	5x1=5
	चलो अभीष्ट मार्ग में सहर्ष खेलते हुए	

	विपत्ति, विघ्न जो पड़े उन्हें ढकेलते हुए घटे न हेल–मेल हाँ बढ़े न भिन्नता कभी अतर्क एक पंथ के सतर्क पंथ हों सभी तभी समर्थ भाव है कि तारता हुआ तरे वही मनुष्य है कि जो मनुष्य के लिए मरे	
(क)	जीवन में निर्धारित लक्ष्य कैसे प्राप्त किया जा सकता है? i. संपर्क बढ़ाने से ii. साधन जुटाने से iii. सतत प्रयत्नशील रहने से iv. लक्ष्य का ध्यान करने से	1
(ख)	कवि को किस बात का डर है ? i. दूरियाँ बढ़ने की ii. प्रेम कम होने की iii. सहयोग में कमी iv. एकता की भावना का	1
(ग)	निम्नलिखित कथन (A) तथा कारण (R) को ध्यानपूर्वक पढ़िए। उसके बाद दिए गए विकल्प में से कोई एक सही विकल्प चुनकर लिखिए। अभिकथन (A) – कवि मनुष्य के लिए मनुष्यता का होना अनिवार्य मानता है। कारण (R) – मनुष्यता के लिए संतोष का होना आवश्यक नहीं है। i. कथन (A) गलत है, किंतु कारण (R) सही है। ii. कथन (A) और कारण (R) दोनों ही गलत हैं। iii. कथन (A) सही है और कारण (R) कथन (A) की सही व्याख्या है। iv. कथन (A) सही है किंतु कारण (R) कथन (A) की सही व्याख्या नहीं है।	1
(घ)	कवि समर्थ भाव किसे मानता है? i. स्वार्थ भावना को सबल बनाना ii. कार्य में सफलता प्राप्त करना iii. कार्य के प्रति लगनशील रहना iv. स्वयं के साथ दूसरे को भी आगे बढ़ाना	1
(ङ)	र्क एक पंथ के सतर्क पंथ हों सभी' – पंक्ति का भाव है – i. तर्कहीनता ii. भावुकता iii. नकारात्मकता iv. सकारात्मकता	1

10.	काव्य खंड पर आधारित निम्नलिखित प्रश्नों में से किन्हीं तीन प्रश्नों के उत्तर लगभग 25-30 शब्दों में लिखिए -	3x2=6
(क)	प्रत्येक व्यक्ति की विशेषता उसके भीतर निहित होती है। कबीर की साखी से उदाहरण देकर स्पष्ट कीजिए।	2
(ख)	जीवन में सुख-दुख धूप और बादल की तरह होते हैं।	2
(ग)	'पर्वत प्रदेश में पावस' कविता से कोई एक उदाहरण देकर सिद्ध कीजिए।	2
(घ)	तोप जैसे लोगों का परिणाम भी तोप जैसा ही होता है, विचार व्यक्त कीजिए।	2
(ङ)	मनुष्य को अपने साहस और पुरुषार्थ पर भाग्य से अधिक भरोसा रखना चाहिए। 'आत्मत्राण' कविता के आधार पर सिद्ध कीजिए।	2
11.	पूरक पुस्तक 'संचयन' पर आधारित निम्नलिखित प्रश्नों में से किन्हीं दो प्रश्नों के उत्तर लगभग 40-50 शब्दों में लिखिए -	2x3=6
(क)	भारत एक बहुधार्मिक समाज वाला देश है। सामाजिक सद्भाव के लिए 'टोपी शुक्ला' पाठ आपको कैसे मदद करता है?	3
(ख)	स्मृतियाँ सदैव सुखद होती है। 'सपनों के-से दिन' पाठ में लेखक ने अपनी स्मृतियों को साझा किया है। आप भी इस प्रकार की कोई स्मृति साझा कर बताइए कि वह आपको क्यों अच्छी लगती है?	3
(ग)	आज शहरी एवं ग्रामीण जीवन में अकेलापन एक आम समस्या हो गई है। इससे कैसे मुक्त हुआ जा सकता है। 'हरिहर काका' पाठ के संदर्भ में युक्तियुक्त उत्तर दीजिए।	3
	खंड घ **(रचनात्मक लेखन)**	
12.	निम्नलिखित में से किसी एक विषय पर दिए गए संकेत-बिन्दुओं के आधार पर लगभग 120 शब्दों में एक अनुच्छेद लिखिए -	1x5=5
	(i) चुनाव में मतदान का महत्व • चुनाव क्या है • चुनाव की आवश्यकता • मतदान का महत्व **(ii) स्वच्छता में आम आदमी की भूमिका** • स्वच्छता क्यों आवश्यक • स्वच्छता का स्वास्थ्य पर प्रभाव • हमारी भूमिका **(iii) यांत्रिक सुविधाओं का पर्यावरण पर प्रभाव** • यांत्रिक सुविधा से अभिप्राय • यंत्रों की अधीनता	

	• पर्यावरण पर प्रभाव	
13.	**निम्नलिखित में से किसी एक विषय पर लगभग 100 शब्दों में पत्र लिखिए –**	1x5=5
	आप श्याम/दीपशिखा हैं। विद्यालय में भाषा प्रयोगशाला खुलवाने के लिए प्रधानाचार्य को पत्र लिखिए जिससे विद्यार्थी भाषा की ध्वनियों को समझकर श्रवण एवं वाचन कौशल का विकास कर सकें । **अथवा** आप बी-43, आकाश विहार, दिल्ली निवासी राजन/ रम्या हैं। हर साल होने वाली 'परीक्षा पर चर्चा' पर अपने विचार व्यक्त करते हुए किसी प्रतिष्ठित समाचार-पत्र के संपादक को पत्र लिखिए।	
14.	**निम्नलिखित में से किसी एक विषय पर लगभग 60 शब्दों में सूचना लिखिए-** आप राहुल/रोशनी हैं। आप अपने स्कूल के विद्यार्थी परिषद के सचिव हैं। आपके स्कूल में अंतर्विद्यालयी 'वाद विवाद प्रतियोगिता का आयोजन किया जा रहा है। इस विषय में सभी विद्यार्थियों को जानकारी देने हेतु एक सूचना तैयार कीजिए। **अथवा** आप वैशाली निवासी अमर/अवनि हैं। आप अपने क्षेत्र के 'निवासी कल्याण संघ' के सचिव हैं। अपने क्षेत्र में लगने वाले रक्तदान शिविर की जानकारी देते हुए एक सूचना लिखिए।	1x4=4
15.	**निम्नलिखित में से किसी एक विषय पर लगभग 40 शब्दों में विज्ञापन लिखिए-** आपने खेल सामग्री की एक नई दुकान खोली है। अपनी दुकान के बारे में जानकारी देते हुए एक आकर्षक विज्ञापन तैयार कीजिए। **अथवा** 'भ्रष्टाचार मुक्त भारत' के विषय में लोगों को जागरूक करते हुए सरकार की ओर से एक विज्ञापन तैयार कीजिए।	1x3=3
16.	एक शाम जब मैं घर में बैठी थी तभी अचानक किसी ने ज़ोर से दरवाजा खटखटाया। मैं चौंक गया/गई.....' पंक्ति से लगभग 100 शब्दों में **लघुकथा** लिखिए। **अथवा**	1x5=5

	आप शक्ति/संयम हैं। आप लालटेन गंज में रहते हैं। आपके क्षेत्र में पिछले एक महीने से बिजली की गंभीर समस्या चल रही है। इसकी जानकारी देते हुए बिजली विभाग के वरिष्ठ अधिकारी को लगभग 80 शब्दों में **ई–मेल** लिखिए।	

SAMPLE QUESTION PAPER
Class X Session 2024-25
MATHEMATICS BASIC (Code No.241)

TIME: 3 hours **MAX.MARKS: 80**

General Instructions:

Read the following instructions carefully and follow them:

1. This question paper contains 38 questions.
2. This Question Paper is divided into 5 Sections A, B, C, D and E.
3. In Section A, Questions no. 1-18 are multiple choice questions (MCQs) and questions no. 19 and 20 are Assertion- Reason based questions of 1 mark each.
4. In Section B, Questions no. 21-25 are very short answer (VSA) type questions, carrying 02 marks each.
5. In Section C, Questions no. 26-31 are short answer (SA) type questions, carrying 03 marks each.
6. In Section D, Questions no. 32-35 are long answer (LA) type questions, carrying 05 marks each.
7. In Section E, Questions no. 36-38 are case study based questions carrying 4 marks each with sub parts of the values of 1, 1 and 2 marks each respectively.
8. All Questions are compulsory. However, an internal choice in 2 Questions of section B, 2 Questions of section C and 2 Questions of section D has been provided. And internal choice has been provided in all the 2 marks questions of Section E.
9. Draw neat and clean figures wherever required.
10. Take π =22/7 wherever required if not stated.
11. Use of calculators is not allowed.

	Section A	
	Section A consists of 20 questions of 1 mark each.	
1.	HCF OF $(3^3 \times 5^2 \times 2), (3^2 \times 5^3 \times 2^2)$ and $(3^4 \times 5 \times 2^3)$ is (A) 450 (B) 90 (C) 180 (D) 630	**1**
2.	The system of linear equations represented by the lines l and m is 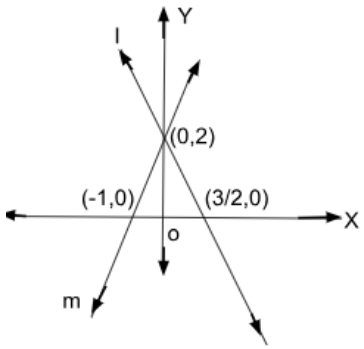 (A) consistent with unique solution (B) inconsistent (C) consistent with three solutions (D) consistent with many solutions	**1**
3.	The value of k for which the quadratic equation $kx^2 - 5x + 1 = 0$ does not have a real solution, is (A) 0 (B) $\frac{25}{4}$ (C) $\frac{4}{25}$ (D) 7	**1**

4.	The distance between the points (a, b) and $(-a, -b)$ is (A)$\sqrt{a^2+b^2}$ (B) a^2+b^2 (C) $2\sqrt{a^2+b^2}$ (D) $4\sqrt{a^2+b^2}$	**1**
5.	In the given figure, PQ and PR are tangents to a circle centred at O. If $\angle QPR=35°$ then $\angle QOR$ is equal to 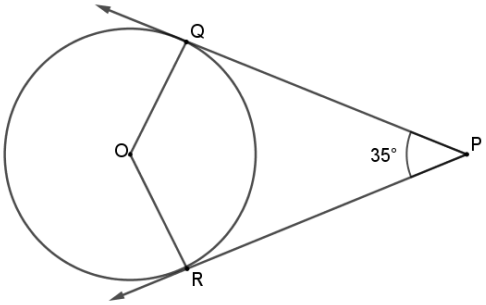 (A) $70°$ (B) $90°$ (C) $135°$ (D) $145°$	**1**
6.	If $\triangle ABC \sim \triangle PQR$ such that 3AB = 2PQ and BC=10 cm, then length QR is equal to (A) 10 cm (B) 15 cm (C) $\frac{20}{3}$ cm (D) 30 cm	**1**
7.	If 3 $\cot A$ =4, where $0° < A < 90°$, then $\sec A$ is equal to (A) $\frac{5}{4}$ (B) $\frac{4}{3}$ (C) $\frac{5}{3}$ (D) $\frac{3}{4}$	**1**
8.	In the given figure, ΔBAC is similar to 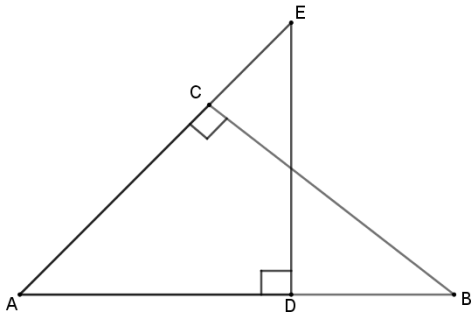 (A) ΔAED (B) ΔEAD (C) ΔACB (D) ΔBCA	**1**
9.	If H.C.F(420,189) = 21 then L.C.M(420,189) is (A) 420 (B) 1890 (C) 3780 (D) 3680	**1**
10.	The 4th term from the end of the A.P $-8, -5, -2, \ldots, 49$ is (A) 37 (B) 40 (C) 1 (D) 43	**1**
11.	In the given figure, if $\triangle OCA \sim \triangle OBD$ then $\angle OAC$ is equal to	**1**

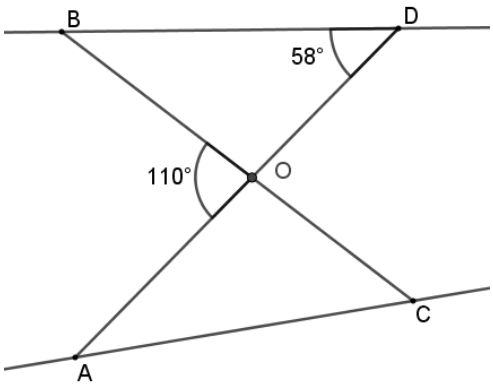

(A) $58°$ (B) $55°$ (C) $128°$ (D) $52°$

12. If perimeter of given triangle is 38 cm, then length AP is equal to **1**

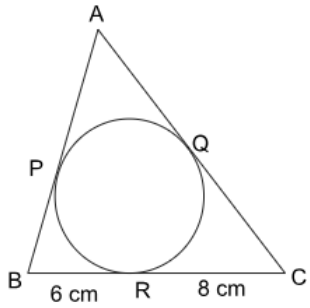

(A)19 cm (B) 5 cm (C) 10 cm (D)8 cm

13. $\frac{1-tan^2 30°}{1+tan^2 30°}$ is equal to **1**

(A) $\cos 60°$ (B) $\sin 60°$ (C) 1 (D) $tan^2 60°$

14. The total surface area of solid hemisphere of radius r is **1**

(A) πr^2 (B) $2\pi r^2$ (C) $3\pi r^2$ (D) $4\pi r^2$

15. Which of the following cannot be the probability of an event? **1**

(A) 0.4 (B) 4% (C) 0.04% (D) 4

16. The roots of quadratic equation $3x^2 - 4\sqrt{3}x + 4 = 0$ are **1**

(A) not real (B) real and equal

(C) rational and distinct (D) irrational and distinct

17. The following distribution shows the marks distribution of 80 students. **1**

Marks	Below 10	Below 20	Below 30	Below 40	Below 50	Below 60
No. of students	2	12	28	56	76	80

The median class is

(A) 20-30 (B) 40-50 (C) 30-40 (D) 10-20

18. A quadratic polynomial whose zeroes are $\frac{2}{5}$ and $\frac{-1}{5}$ is **1**

(A) $25x^2 + 5x - 2$ (B) $5x^2 - 2x + 1$

(C) $5x^2 + 2x - 1$ (D) $25x^2 - 5x - 2$

	DIRECTION: In the question number 19 and 20, a statement of **Assertion (A)** is followed by a statement of **Reason (R)**. Choose the correct option A) Both assertion (A) and reason (R) are true and reason (R) is the correct explanation of assertion (A) B) Both assertion (A) and reason (R) are true and reason (R) is not the correct explanation of assertion (A) C) Assertion (A) is true but reason (R) is false. D) Assertion (A) is false but reason (R) is true.	
19.	Assertion(A): The sequence $-1, -1-1, \ldots, -1$ is an AP. Reason(R): In an AP, $a_n - a_{n-1}$ is constant where $n \geq 2$ and $n \in N$	**1**
20.	Assertion(A): $(2+\sqrt{3})\sqrt{3}$ is an irrational number. Reason(R): Product of two irrational numbers is always irrational.	**1**
	Section B	
	Section B consists of 5 questions of 2 marks each.	
21 (A).	$P(x, y)$ is a point equidistant from the points $A(4,3)$ and $B(3,4)$. Prove that $x - y = 0$.	**2**
	OR	
21 (B).	In the given figure, ΔABC is an equilateral triangle. Coordinates of vertices A and B are $(0,3)$ and $(0,-3)$ respectively. Find the coordinates of points C. 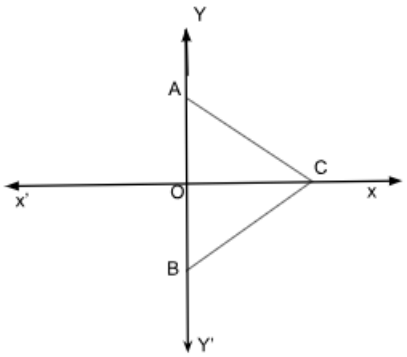 	
22.	In two concentric circles, a chord of length 8 cm of the larger circle touches the smaller circle. If the radius of the larger circle is 5 cm, then find the radius of the smaller circle.	**2**
23 (A).	The sum of the first 12 terms of an A.P. is 900. If its first term is 20 then find the common difference and 12th term.	**2**
	OR	
23 (B).	The sum of first n terms of an A.P. is represented by $S_n = 6n - n^2$. Find the common difference.	
24.	If $sin(A-B) = \frac{1}{2}\ and\ cos(A+B) = \frac{1}{2}, 0° < A+B < 90°\ and\ A > B$, then find the values of A and B.	**2**

25. Calculate mode of the following distribution: **2**

Class	5-10	10-15	15-20	20-25	25-30	30-35
Frequency	5	6	15	10	5	4

Section C

Section C consists of 6 questions of 3 marks each.

26. Prove that $\sqrt{5}$ is an irrational number. **3**

27 (A). Find the ratio in which the y-axis divides the line segment joining the points $(4,-5)$ and $(-1,2)$. Also find the point of intersection. **3**

OR

27 (B). Line $4x + y = 4$ divides the line segment joining the points $(-2,-1)$ and $(3,5)$ in a certain ratio. Find the ratio.

28. Prove that: $(cosecA - sinA)(secA - cosA) = \frac{1}{\tan A + \cot A}$. **3**

29. Find the mean using the step deviation method. **3**

Class	0-10	10-20	20-30	30-40	40-50
Frequency	6	10	15	9	10

30. (A) In the given figure, PA and PB are tangents to a circle centred at O. Prove that (i) OP bisects $\angle APB$ (ii) OP is the right bisector of AB. **3**

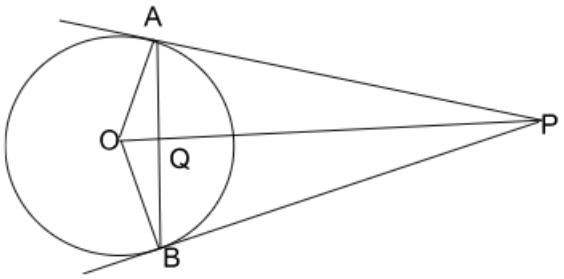

OR

30 (B). Prove that the lengths of tangents drawn from an external point to a circle are equal. **3**

31. The sum of a two-digit number and the number obtained by reversing the order of its digits is 99. If ten's digit is 3 more than the unit's digit, then find the number. **3**

Section -D

	Section D consists of 4 questions of 5 marks each	
32 (A).	Amita buys some books for ₹1920. If she had bought 4 more books for the same amount each book would cost her ₹ 24 less. How many books did she buy? What was the initial price of one book?	**5**
	OR	
32 (B).	A train travels at a certain average speed for a distance of 132 km and then travels a distance of 140 km at an average speed of 4 km/h more than the initial speed. If it takes 4 hours to complete the whole journey, what was the initial average speed? Determine the time taken by train to cover the distances separately.	**5**
33.	If a line is drawn parallel to one side of a triangle to intersect the other two sides in distinct points, then prove that the other two sides are divided in the same ratio.	**5**
34.	The perimeter of sector OACB of the circle centred at O and of radius 24, is 73.12 cm. 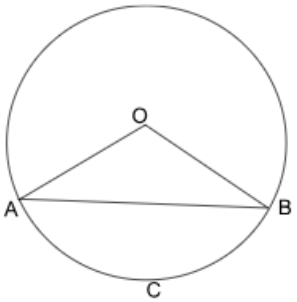 (i) Find the central angle $\angle AOB$. (ii) Find the area of the minor segment ACB. (Use $\pi = 3.14\ and\ \sqrt{3} = 1.73$)	**5**
35 (A).	From the top of a 9 m high building, the angle of elevation of the top of a cable tower is $60°$ and angle of depression of its foot is $45°$. Determine the height of the tower and distance between building and tower. (Use $\sqrt{3} = 1.732$)	**5**
	OR	
35 (B).	As observed from the top of a 75 m high lighthouse from the sea level, the angles of depression of two ships are $30°$ and $45°$. If one ship is exactly behind the other on the same side of the lighthouse, find the distance between the two ships (Use $\sqrt{3} = 1.732$)	**5**
	Section E	
36.	A group of students conducted a survey to find out about the preferred mode of transportation to school among their classmates. They surveyed 200 students from their school. The results of the survey are as follows: 120 students preferred to walk to school. 25% of the students preferred to use bicycles. 10% of the students preferred to take the bus.	

	Remaining students preferred to be dropped off by car. Based on the above information, answer the following questions:	
(i)	What is the probability that a randomly selected student does not prefer to walk to school?	**1**
(ii)	Find the probability of a randomly selected student who prefers to walk or use a bicycle.	**1**
(iii)(A)	One day 50% of walking students decided to come by bicycle. What is the probability that a randomly selected student comes to school using a bicycle on that day? **OR**	**2**
(B)	What is the probability that a randomly selected student prefers to be dropped off by car?	**2**
37.	Radha, an aspiring landscape designer, is tasked with creating a visually captivating pool design that incorporates a unique arrangement of fountains. The challenge entails arranging the fountains in such a way that when water is thrown upwards, it forms the shape of a parabola. The graph of one such parabola is given below. 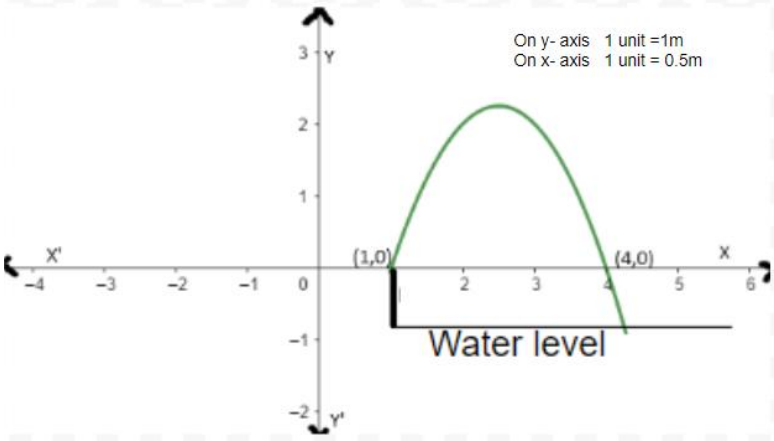 The height of each fountain rod above water level is 10 cm. The equation of the downward-facing parabola representing the water fountain is given by $p(x) = -x^2 + 5x - 4$. Based on the above information, answer the following questions:	
(i)	Find the zeroes of the polynomial p(x) from the graph.	**1**
(ii)	Find the value of x at which water attains maximum height.	**1**

(iii)(A)	If h is the maximum height attained by the water stream from the water level of the pool, then find the value of h.	**2**
	OR	
(B)	At what point(s) on x- axis, the height of water above x- axis is 2 m?	**2**
38.	Rinku was very happy to receive a fancy jumbo pencil from his best friend Rohan on his birthday. Pencil is a basic writing tool, when sharpened its shape is a combination of cylinder & cone as given in the picture. Cylindrical pencil with conical head is a common shape worldwide since ages. Commonly pencils are made up of wood & plastic but we should promote pencils made up of eco-friendly material (many options available in the market these days) to save environment. The dimensions of Rinku's pencil are given as follows: Length of cylindrical portion is 21cm. Diameter of the base is 1 cm and height of the conical portion is 1.2 cm Based on the above information, answer the following questions:	
(i)	Find the slant height of the sharpened part.	**1**
(ii)	Find curved surface area of sharpened part (in terms of π).	**1**
(iii)(A)	Find the total surface area of the pencil (in terms of π).	**2**
	OR	
(B)	The pencil's total height decreases by 8.2 cm after sharpening it many times, what is the volume of the cylindrical part of the shortened pencil (in terms of π)?	**2**

SAMPLE QUESTION PAPER
Class X Session 2024-25
MATHEMATICS STANDARD (Code No.041)

TIME: 3 hours MAX.MARKS: 80

General Instructions:

Read the following instructions carefully and follow them:

1. This question paper contains 38 questions.
2. This Question Paper is divided into 5 Sections A, B, C, D and E.
3. In Section A, Questions no. 1-18 are multiple choice questions (MCQs) and questions no. 19 and 20 are Assertion- Reason based questions of 1 mark each.
4. In Section B, Questions no. 21-25 are very short answer (VSA) type questions, carrying 02 marks each.
5. In Section C, Questions no. 26-31 are short answer (SA) type questions, carrying 03 marks each.
6. In Section D, Questions no. 32-35 are long answer (LA) type questions, carrying 05 marks each.
7. In Section E, Questions no. 36-38 are case study based questions carrying 4 marks each with sub parts of the values of 1, 1 and 2 marks each respectively.
8. All Questions are compulsory. However, an internal choice in 2 Question of Section B, 2 Questions of Section C and 2 Questions of Section D has been provided. An internal choice has been provided in all the 2 marks questions of Section E.
9. Draw neat and clean figures wherever required.
10. Take π =22/7 wherever required if not stated.
11. Use of calculators is not allowed.

	Section A	
	Section A consists of 20 questions of 1 mark each.	
1.	The graph of a quadratic polynomial p(x) passes through the points (-6,0), (0, -30), (4,-20) and (6,0). The zeroes of the polynomial are A) - 6,0 B) 4, 6 C) - 30,-20 D) - 6,6	1
2.	The value of k for which the system of equations 3x-ky= 7 and 6x+ 10y =3 is inconsistent, is A) -10 B) -5 C) 5 D) 7	1
3.	Which of the following statements is **not** true? A) A number of secants can be drawn at any point on the circle. B) Only one tangent can be drawn at any point on a circle. C) A chord is a line segment joining two points on the circle D) From a point inside a circle only two tangents can be drawn.	1
4.	If nth term of an A.P. is 7n-4 then the common difference of the A.P. is A) 7 B) 7n C) - 4 D) 4	1

5.	The radius of the base of a right circular cone and the radius of a sphere are each 5 cm in length. If the volume of the cone is equal to the volume of the sphere then the height of the cone is A) 5 cm B) 20 cm C) 10 cm D) 4 cm	1
6.	If $\tan\theta = \frac{5}{2}$ then $\frac{4\sin\theta + \cos\theta}{4\sin\theta - \cos\theta}$ is equal to A) $\frac{11}{9}$ B) $\frac{3}{2}$ C) $\frac{9}{11}$ D) 4	1
7.	In the given figure, a tangent has been drawn at a point P on the circle centred at O. 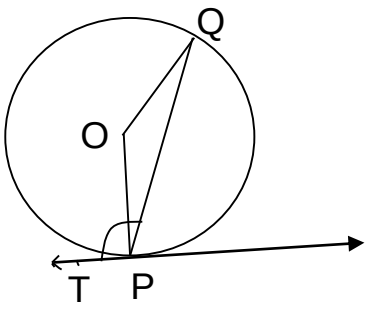 If $\angle$ TPQ= 110° then $\angle$POQ is equal to A) 110° B) 70° C) 140° D)55°	1
8.	A quadratic polynomial having zeroes - $\sqrt{\frac{5}{2}}$ and $\sqrt{\frac{5}{2}}$ is A) $x^2 - 5\sqrt{2}$ x +1 B) $8x^2$ - 20 C) $15x^2$- 6 D) x^2 - $2\sqrt{5}$ x -1	1
9.	Consider the frequency distribution of 45 observations. <table><tr><td>Class</td><td>0-10</td><td>10-20</td><td>20-30</td><td>30-40</td><td>40-50</td></tr><tr><td>Frequency</td><td>5</td><td>9</td><td>15</td><td>10</td><td>6</td></tr></table> The upper limit of median class is A) 20 B) 10 C) 30 D) 40	1
10.	O is the point of intersection of two chords AB and CD of a circle. 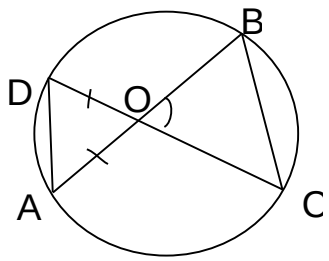 If $\angle BOC = 80^O$ and OA = OD then ΔODA and ΔOBC are A) equilateral and similar B) isosceles and similar C) isosceles but not similar D) not similar	1

11.	The roots of the quadratic equation x^2+x-1 = 0 are A) Irrational and distinct B) not real C) rational and distinct D) real and equal	1
12.	If $\theta = 30^o$ then the value of 3tanθ is A)1 B) $\frac{1}{\sqrt{3}}$ C) $\frac{3}{\sqrt{3}}$ (D) not defined	1
13.	The volume of a solid hemisphere is $\frac{396}{7}\ cm^3$.The total surface area of the solid hemisphere (in sq.cm) is A) $\frac{396}{7}$ B) $\frac{594}{7}$ C) $\frac{549}{7}$ D) $\frac{604}{7}$	1
14.	In a bag containing 24 balls, 4 are blue, 11 are green and the rest are white. One ball is drawn at random. The probability that drawn ball is white in colour is $A)\frac{1}{6}$ B) $\frac{3}{8}$ C) $\frac{11}{24}$ D) $\frac{5}{8}$	1
15.	The point on the x- axis nearest to the point (-4,-5) is A) (0, 0) B) (-4, 0) C) (-5, 0) D) ($\sqrt{41}$, 0)	1
16.	Which of the following gives the middle most observation of the data? A) Median B) Mean C) Range D) Mode	1
17.	A point on the x-axis divides the line segment joining the points A(2, -3) and B(5, 6) in the ratio 1:2. The point is A) (4, 0) B) $(\frac{7}{2}, \frac{3}{2})$ C) (3, 0) D) (0,3)	1
18.	A card is drawn from a well shuffled deck of playing cards. The probability of getting red face card is $A)\ \frac{3}{13}$ B) $\frac{1}{2}$ C) $\frac{3}{52}$ D) $\frac{3}{26}$	1
	DIRECTION: In the question number 19 and 20, a statement of **Assertion (A)** is followed by a statement of **Reason (R)**. Choose the correct option A)Both assertion (A) and reason (R) are true and reason (R) is the correct explanation of assertion (A) B)Both assertion (A) and reason (R) are true and reason (R) is not the correct explanation of assertion (A) C)Assertion (A) is true but reason (R) is false. D)Assertion (A) is false but reason (R) is true.	
19.	Assertion (A): HCF of any two consecutive even natural numbers is always 2. Reason (R): Even natural numbers are divisible by 2.	1
20.	Assertion (A): If the radius of sector of a circle is reduced to its half and angle is doubled then the perimeter of the sector remains the same.	1

	Reason (R): The length of the arc subtending angle θ at the centre of a circle of radius r = $\frac{\Pi r\theta}{180}$.	
	Section B	
	Section B consists of 5 questions of 2 marks each.	
21.	(A)Find the H.C.F and L.C.M of 480 and 720 using the Prime factorisation method. **OR** (A) The H.C.F of 85 and 238 is expressible in the form 85m -238. Find the value of m.	2
22.	(A) Two dice are rolled together bearing numbers 4, 6, 7, 9, 11, 12. Find the probability that the product of numbers obtained is an odd number **OR** (B) How many positive three digit integers have the hundredths digit 8 and unit's digit 5? Find the probability of selecting one such number out of all three digit numbers.	2
23.	Evaluate: $\frac{2sin^2 60^o - tan^2 30^o}{sec^2 45^o}$	2
24.	Find the point(s) on the x-axis which is at a distance of $\sqrt{41}$ units from the point (8, -5).	2
25.	Show that the points A(-5,6), B(3, 0) and C(9, 8) are the vertices of an isosceles triangle.	2
	Section C	
	Section C consists of 6 questions of 3 marks each.	
26.	(A) In ΔABC, D, E and F are midpoints of BC,CA and AB respectively. Prove that $\triangle FBD \sim \triangle$ DEF and $\triangle$ DEF $\sim \triangle$ ABC 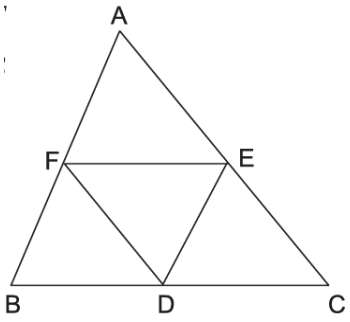 **OR** (B) In ΔABC, P and Q are points on AB and AC respectively such that PQ is parallel to BC.	3

	Prove that the median AD drawn from A on BC bisects PQ. 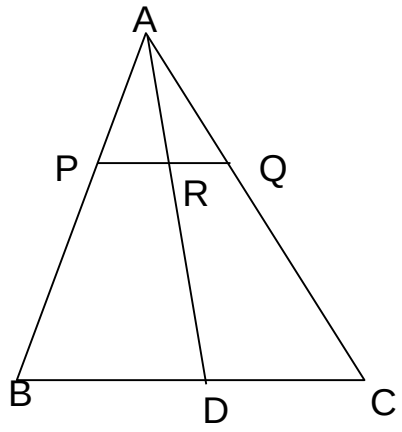 	
27.	The sum of two numbers is 18 and the sum of their reciprocals is 9/40. Find the numbers.	3
28.	If α and β are zeroes of a polynomial $6x^2$ -5x+1 then form a quadratic polynomial whose zeroes are α^2 and β^2.	3
29.	If cosθ + sinθ = 1 , then prove that cosθ - sinθ = ±1	3
30.	(A) The minute hand of a wall clock is 18 cm long. Find the area of the face of the clock described by the minute hand in 35 minutes. **OR** (B) AB is a chord of a circle centred at O such that ∠AOB=60˚. If OA = 14 cm then find the area of the minor segment. (take $\sqrt{3}$ =1.73) 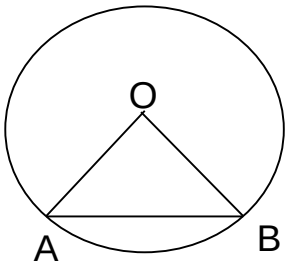 	3
31.	Prove that $\sqrt{3}$ is an irrational number.	3
	Section D	
	Section D consists of 4 questions of 5 marks each	
32.	(A) Solve the following system of linear equations graphically: x+2y = 3, 2x-3y+8 = 0 **OR** (B) Places A and B are 180 km apart on a highway. One car starts from A and another from B at the same time. If the car travels in the same direction at	5

different speeds, they meet in 9 hours. If they travel towards each other with the same speeds as before, they meet in an hour. What are the speeds of the two cars?

33. Prove that the lengths of tangents drawn from an external point to a circle are equal. 5

Using above result, find the length BC of ΔABC. Given that, a circle is inscribed in ΔABC touching the sides AB, BC and CA at R, P and Q respectively and AB= 10 cm, AQ= 7cm ,CQ= 5cm.

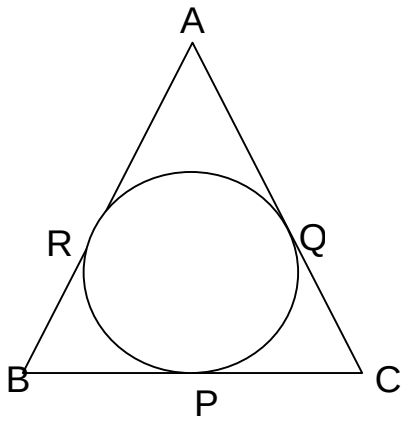

34. A boy whose eye level is 1.35 m from the ground, spots a balloon moving with the wind in a horizontal line at some height from the ground. The angle of elevation of the balloon from the eyes of the boy at an instant is 60°. After 12 seconds, the angle of elevation reduces to 30°. If the speed of the wind is 3m/s then find the height of the balloon from the ground. (Use $\sqrt{3}$= 1.73) 5

35. Find the mean and median of the following data: 5

Class	85-90	90-95	95-100	100-105	105-110	110-115
frequency	15	22	20	18	20	25

OR

The monthly expenditure on milk in 200 families of a Housing Society is given below

Monthly Expenditure (in Rs.)	1000-1500	1500-2000	2000-2500	2500-3000	3000-3500	3500-4000	4000-4500	4500-5000
Number of families	24	40	33	x	30	22	16	7

Find the value of x and also find the mean expenditure

Section E

Section E consists of 3 case study based questions of 4 marks each.

36. Ms. Sheela visited a store near her house and found that the glass jars are arranged one above the other in a specific pattern.

	On the top layer there are 3 jars. In the next layer there are 6 jars. In the 3rd layer from the top there are 9 jars and so on till the 8th layer. On the basis of the above situation answer the following questions. (i) Write an A.P whose terms represent the number of jars in different layers starting from top . Also, find the common difference. (ii) Is it possible to arrange 34 jars in a layer if this pattern is continued? Justify your answer. (iii) (A) If there are 'n' number of rows in a layer then find the expression for finding the total number of jars in terms of n. Hence find S_8 . **OR** (iii) (B) The shopkeeper added 3 jars in each layer. How many jars are there in the 5th layer from the top? .	1 1 2 2
37.	 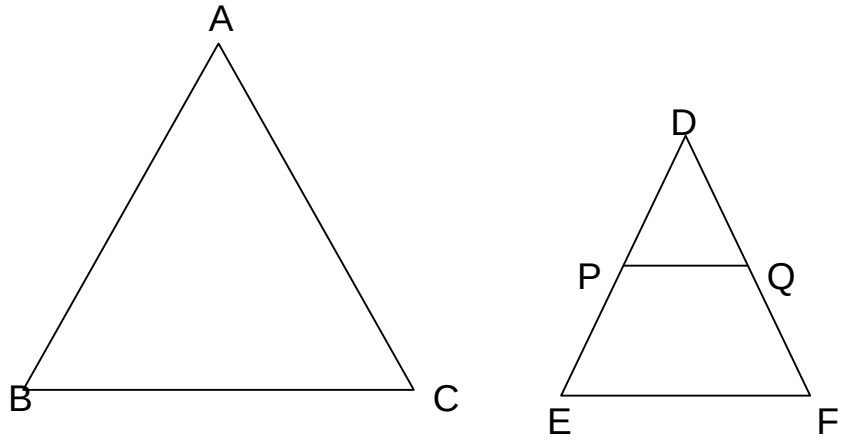 Triangle is a very popular shape used in interior designing. The picture given above shows a cabinet designed by a famous interior designer. Here the largest triangle is represented by △ ABC and smallest one with shelf is represented by △ DEF. PQ is parallel to EF. (i) Show that △ DPQ ~ △ DEF.	1

	(ii) If DP= 50 cm and PE = 70 cm then find $\frac{PQ}{EF}$.	1
	(iii) (A) If 2AB = 5DE and △ ABC ~ △ DEF then show that $\frac{perimeter\ of\ \triangle ABC}{perimeter\ of\ \triangle DEF}$ is constant. **OR** (iii) (B) If AM and DN are medians of triangles ABC and DEF respectively then prove that △ ABM ~ △ DEN.	2 2
38.	Metallic silos are used by farmers for storing grains. Farmer Girdhar has decided to build a new metallic silo to store his harvested grains. It is in the shape of a cylinder mounted by a cone. Dimensions of the conical part of a silo is as follows: Radius of base = 1.5 m Height = 2 m Dimensions of the cylindrical part of a silo is as follows: Radius = 1.5 m Height = 7 m On the basis of the above information answer the following questions. (i) Calculate the slant height of the conical part of one silo. (ii) Find the curved surface area of the conical part of one silo. (iii)(A) Find the cost of metal sheet used to make the curved cylindrical part of 1 silo at the rate of ₹2000 per m^2. **OR** (iii) (B) Find the total capacity of one silo to store grains.	 1 1 2 2

SCIENCE SQP (2024-25)
CLASS X
(Science 086)

Max. Marks: 80 **Time Allowed: 3 hours**

General Instructions:

1. All *questions would be compulsory. However, an internal choice of approximately 33% would be provided. 50% marks are to be allotted to competency-based questions.*
2. *Section A would have 16 simple/complex MCQs and 04 Assertion-Reasoning type questions carrying 1 mark each.*
3. *Section B would have 6 Short Answer (SA) type questions carrying 02 marks each.*
4. *Section C would have 7 Short Answer (SA) type questions carrying 03 marks each.*
5. *Section D would have 3 Long Answer (LA) type questions carrying 05 marks each.*
6. *Section E would have 3 source based/case based/passage based/integrated units of assessment (04 marks each) with sub-parts of the values of 1/2/3 marks.*

Section-A

Question 1 to 16 are multiple choice questions. Only one of the choices is correct. Select and write the correct choice as well as the answer to these questions.

1 Identify ‘p’, ‘q’ and ‘r’ in the following balanced reaction — 1

$$p\ Pb(NO_3)_{2(s)} \xrightarrow{Heat} q\ PbO_{(s)} + r\ NO_{2(g)} + O_{2(g)}$$

A. 2,2,4
B. 2,4,2
C. 2,4,4
D. 4,2,2

2 Match column I with column II and select the correct option using the given codes. — 1

Column I	Column II
a. A metal that forms amphoteric oxides	(i) Ga
b. A metal which melts when kept on our palm	(ii) Au
c. A metal that reacts with nitric acid	(iii) Al
d. A metal which cannot displace hydrogen from acids	(iv) Mn

A. a – (ii), b – (i), c – (iii), d – (iv)
B. a – (iii), b – (i), c – (iv), d – (ii)
C. a – (iv), b – (ii), c – (iii), d – (i)
D. a – (iii), b – (ii), c – (i), d – (iv)

3	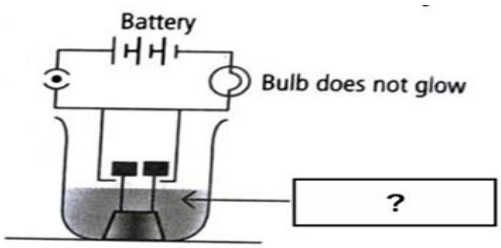 The solution in the given figure is likely to be A. HNO_3 B. C_2H_5OH C. H_2SO_4 D. CO_2 in water - - - - - - - - - - - - - - *For Visual Impaired Students* Which among the following is considered as the strongest electrolyte? A. Dilute acid B. Dilute sugar solution C. Glucose solution D. Ethanol in water	1
4	An aqueous solution 'A' turns the phenolphthalein solution pink. On addition of an aqueous solution 'B' to 'A', the pink colour disappears. Which of the following statement is true for the solutions 'A' and 'B'. A. A is strongly basic and B is a weak base. B. A is strongly acidic and B is a weak acid. C. A has a pH greater than 7 and B has a pH less than 7. D. A has a pH less than 7 and B has a pH greater than 7.	1
5	When 50g of lead powder is added to 300 ml of blue copper sulphate solution, after a few hours, the solution becomes colourless. This is an example of A. Combination reaction B. Decomposition reaction C. Displacement reaction D. Double displacement reaction	1
6	The electronic configuration of three elements X, Y and Z are X- 2, 8, 7; Y- 2, 8, 2; and Z - 2, 8 A. Y and Z are metals B. Y and X are non-metals C. X is a non -metal and Y is a metal D. Y is a non-metal and Z is a metal	1
7	Which of the following is an endothermic reaction? A. Burning of candle. B. Cooking of food. C. Decomposition of Vegetable matter. D. Reaction of Sodium with air	1

8	During cellular oxidation of Glucose, ATP is produced along with formation of other products in this reaction. Which of the following events is associated with production of maximum ATP molecules per molecule of Glucose during this process? Synthesis of A. ethanol in yeast B. lactic acid in muscle cells C. carbon dioxide in yeast cells D. carbon dioxide in human cells	1
9	During which of the following stages of the circulation of blood in a normal human being, the oxygenated blood is pumped to all parts of the body? A. contraction of the left atrium B. contraction of left ventricle C. relaxation of the right atrium D. relaxation of the right ventricle	1
10	Which of the following adaptations in herbivores helps in digestions of cellulose? A. Longer large intestine B. Smaller large intestine C. Smaller small intestine D. Longer small intestine	1
11	There was a cerebellar dysfunction in a patient. Which of the following activities will get disturbed in this patient as a result of this? A. Salivation B. Hunger control C. Posture and balance D. Regulation of blood pressure	1
12	In snails individuals can begin life as male and depending on environmental conditions they can become female as they grow. This is because A. male snails have dominant genetic makeup. B. female snails have dominant genetic makeup. C. expression of sex chromosomes can change in a snail's life time. D. sex is not genetically determined in snails.	1
13	In the following cases, a ray is incident on a concave mirror. In which case is the angle of incidence equal to zero? A. A ray parallel to the principal axis. B. A ray passing through the centre of curvature and incident obliquely. C. A ray passing through the principal focus and incident obliquely. D. A ray incident obliquely to the principal axis, at the pole of the mirror.	1

14	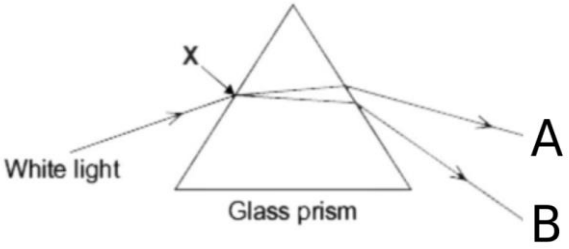 Choose the correct option for the colour of rays for A and B. **Colour of Ray A** / **Colour of Ray B** A. Blue / Red B. Green / Yellow C. Red / Violet D. Violet / Indigo	1
15	Identify the incorrect statement 'The energy available to the producers is maximum' because: A. It is the first trophic level which absorbs1% of light energy directly from the source. B. It utilizes the most of the chemical energy for its own respiration, growth, reproduction, movement etc. C. It utilizes 10% of light energy and transfers the rest to the next trophic level. D. It transfers only 10% of light energy to the next trophic level.	1
16	Which of the following is not a role of decomposers in the ecosystem? A. Natural replenishment of soil. B. Enrichment of oxygen in atmosphere. C. Waste decomposition. D. Break-down of dead remains.	1
Question No. 17 to 20 consist of two statements – **Assertion** (A) and **Reason** (R). Answer these questions by selecting the appropriate option given below: A. Both A and R are true, and R is the correct explanation of A. B. Both A and R are true, and R is not the correct explanation of A. C. A is true but R is false. D. A is false but R is true		
17	**Assertion (A):** On adding dil. HCl to a test tube containing a substance 'X', a colourless gas is produced which gives a pop sound when a burning match stick is brought near it. **Reason (R):** In this reaction metal 'X' is displaced by Hydrogen.	1
18	**Assertion (A):** Generally, the number of chromosomes in a cell and in a germ cell is not the same in species. **Reason (R):** When two germ cells combine, they restore the normal number of chromosomes in a species.	1

19	**Assertion (A)**: A convex mirror always forms an image behind it and the image formed is virtual. **Reason (R)**: According to the sign convention, the focal length of a convex mirror is positive.	1
20	**Assertion (A):** If the lions are removed from a food chain it will not affect the food chain, however if the plants are removed from a food chain it will disturb the ecosystem. **Reason (R)**: Plants are producers who can make food using sunlight, while lions are consumers.	1

Section-B

Question No. 21 to 26 are very short answer questions

21	Identify the type of each of the following reactions stating the reason for your answers. A. $Fe_2O_3 + 2Al \rightarrow Al_2O_3 + 2Fe + heat$ B. $Pb(NO_3)_2 + 2KI \rightarrow PbI_2(\downarrow) + 2KNO_3$	2
22	Differentiate between alveoli and nephron on the basis of the following points:	2

S. No.	Feature	Alveoli	Nephron
1	Structure and location		
2	Function		

23	*Attempt either option A or B.* A. List the steps for the synthesis of glucose by the plants. What special feature is found in desert plants related to this process? **OR** B. Explain the role of the following enzymes in the process of digestion of food in humans: (i) Salivary amylase (ii) Pepsin (iii) Trypsin (iv) Lipase	2
24	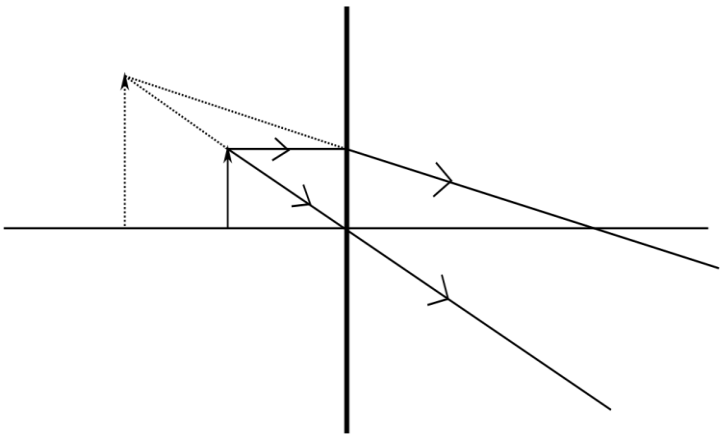 The above figure shows the formation of an image by a lens shown by a thick line.	2

	Analyse the figure and answer the following questions. A. What is the type of lens used? B. What is the nature of the image? C. If the image is formed at a distance of 30 cm from the lens and the image is twice the size of the object, then where is the object placed? - - - - - - - - - - - - - - *For visually impaired students* A. What type of lens always forms a virtual erect and diminished image? B. List two uses of such a lens.	
25	*Attempt either option A or B.* A. 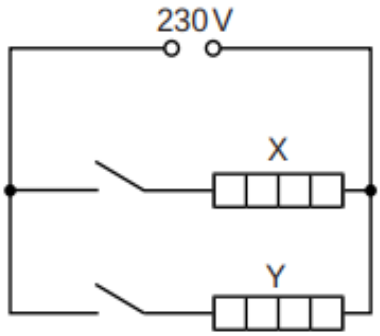 The electric circuit (above figure) in a clothes dryer contains two heaters X and Y in parallel. The above figure shows the circuit connected to a 230 V power supply. When both switches are closed, the current in X is 3.5 A. Analyse the circuit given above and answer the following questions. (i) Calculate the power developed in heater X. (ii) If the resistance of X is double that of Y calculate the current in heater Y. **OR** B. 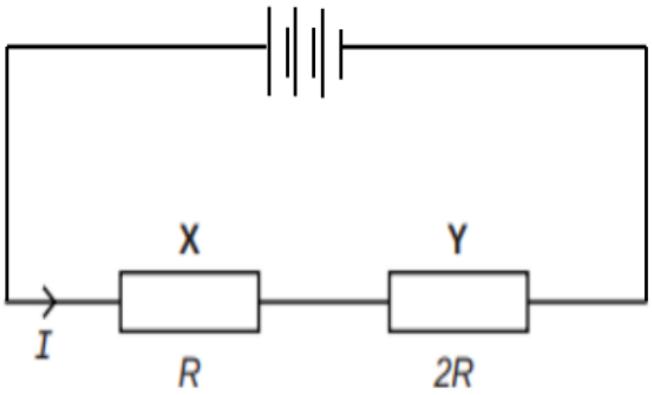 The above figure shows two resistors X and Y connected in series to a battery. The power dissipated for this combination is P_1. When these resistors	2

	are connected in parallel to the same battery then the power dissipated is given by P_2. Find out the ratio $\frac{P_1}{P_2}$. - - - - - - - - - - - - - - *For visually impaired students* A. We have four resistors A, B, C and D of resistance 3 Ω, 6 Ω ,9 Ω and 12 Ω respectively. Find out the lowest resistance which can be obtained by combining these four resistors. **OR** B. You are given 2 fuse wires A and B with current ratings 2A and 5A respectively. Justify with reason which of the two would you use with a 1000W, 220V room heater?	
26	The cartoon below addresses a growing concern: 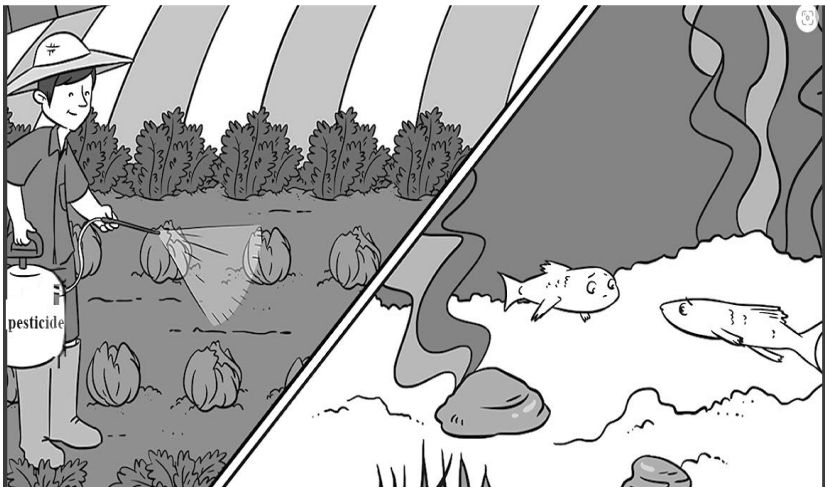 main.jpg (1148×574) (frontiersin.org) What impact will the process shown in the image have on Humans if they occupy the last trophic level? Explain. - - - - - - - - - - - - - - *For visually impaired students* Create a food chain with more than 2 trophic levels that exists in the cabbage farm. If Humans occupy the last trophic level, then how would spraying pesticide affect the humans? Explain.	2
Section-C Question No. 27 to 33 are short answer questions		
27	A. Anirudh took two metal oxides; aluminium oxide and magnesium oxide as shown in the pictures given below. But he forgot to label them. How will you guide/ help Anirudh to identify the oxides and label them?	3

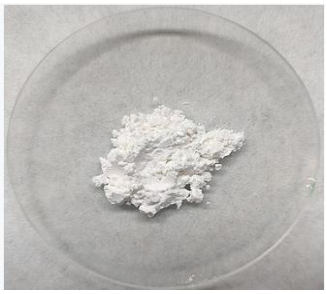

B. In an activity Aishu was given two substances; Copper Sulphide (Cu_2S) and Copper Oxide (Cu_2O) to obtain copper from these compounds. She was able to extract Copper successfully. Illustrate with the help of chemical equations how Aishu might have completed the activity.

- - - - - - - - - - - - - -

For visually impaired students

Give reasons for the following

i. Certain metals are used for making cooking utensils.
ii. Hydrogen gas does not evolve when certain metals except Mg & Mn react with nitric acid.

28 *Attempt either option A or B.* 3

A.

(i) In the given series of reactions, name the compounds X and Z.
(ii) Which type of reaction is X to Z?

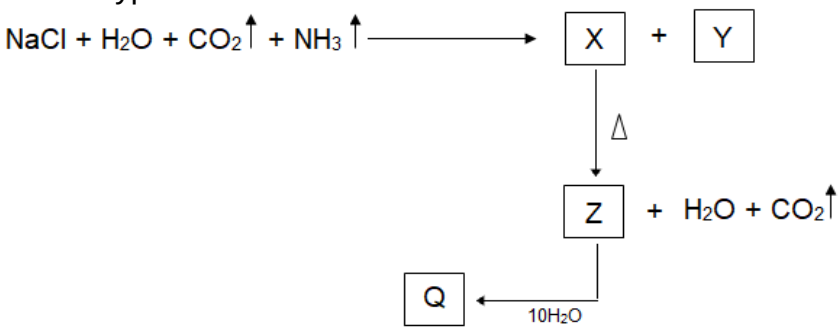

(iii) You are given 3 unknown solutions A, B, and C with pH values of 6, 8 and 9.5 respectively. In which solution will the maximum number of hydronium ions be present? Arrange the given samples in the increasing order of H^+ ion concentration.

OR

B. Comment on the following statements:

(i) Bee sting is treated with baking soda paste whereas wasp sting is treated with dilute vinegar.
(ii) Farmers treat soil with quicklime when tilling.
(iii) Ancient sculptures and marble structures are conserved by treating them with certain chemicals."

29 Water is used by the leaves of the plants for photosynthesis but rather than watering the leaves, we water the plant through the soil. How does this water reach the leaves of the plant? 3

30	A. In a family of four individuals, the father possessed long ears and the mother possessed short ears. If the parents had pure dominant and recessive traits respectively, then calculate the ratio of genetic makeup of F2 generation. Show a suitable cross. (2) B. If father had short ears and the mother had long ears, explain what effect it will have on the ratio of genetic makeup in F2 generation. (1)	3
31	A. What is the fundamental difference between hypermetropia and myopia in terms of the optical experience of a person? B. The diagram below shows a special case of an eye defect. (i) What is the defect that is shown in the figure? (ii) State one cause for such a defect? (iii) Explain with reason if a concave lens can be used to correct the defect. 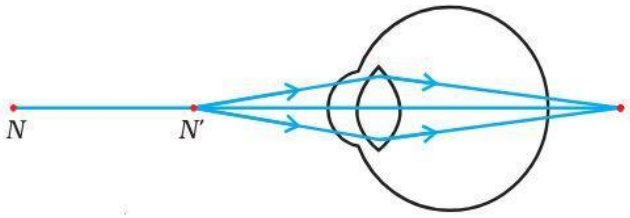 - - - - - - - - - - - - - - *For visually impaired students* A. What is the fundamental difference between hypermetropia and myopia in terms of the optical experience of a person? B. What are the causes of myopia in the human eye?	3
32	A. State the relationship between the resistance R of a wire to its length l and cross sectional area A. Use the mathematical symbols to arrive at the final formula. B. Using the formula define the resistivity of a material.	3
33	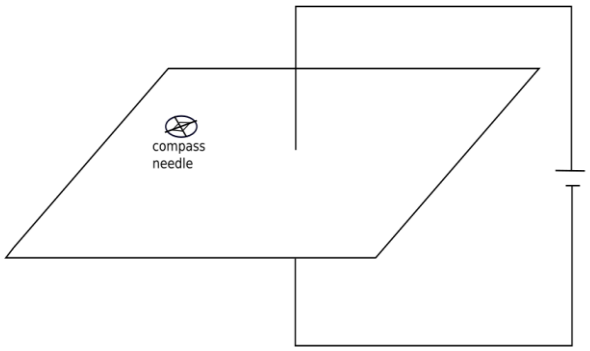 Mona was doing an experiment with a magnetic compass and a straight current-carrying wire. She observed that as she moved the compass away from the current-carrying wire, the deflection of the compass needle reduced. A. Explain why the deflection of the compass needle reduced as Mona moved away the compass needle from the current carrying wire. B. Mention one thing that could have changed in the circuit of the wire that could increase the deflection of the needle. C. Explain with reason what will be the direction of the magnetic field associated with the wire for the case described by the above figure.	3

	- - - - - - - - - - - - - - *For visually impaired students* A. Explain why the deflection of the compass needle reduced as Mona moved away the compass needle from the current carrying wire. B. Mention one thing that could have changed in the circuit of the wire that could increase the deflection of the needle. C. Explain with reason how the direction of the magnetic field associated with the wire changes if the polarity of battery reversed.	
Section-D Question No. 34 to 36 are long answer questions.		
34	*Attempt either option A or B.* A. (i) "Keerthi thinks that Substitution reaction occurs in saturated Hydrocarbons, on the contrary Krishi thinks, it occurs in unsaturated Hydrocarbons." Justify with valid reasoning whose thinking is correct. (ii) "Methane and Propane and their Isomers are used as fuels" Comment. Draw the electron dot structure of the immediate lower homologue of Propane. Give any two characteristics of homologues of a given homologous series. (iii) A mixture of oxygen and ethyne is burnt for welding. Can you predict why a mixture of ethyne and air is not used? **OR** B. (i) 'A' & 'B' are sodium salts of long-chain carboxylic acid and long chain Sulphonic acid respectively. Which one of A or B will you prefer as a cleansing agent while using underground water (hand pump water)? Give the reason for your answer. (ii) Elaborate on the process of cleansing action. Illustrate micelle with the help of labelled diagram. (iii) Write the chemical equation of the preparation of soap from an ester CH_3COOCH_3. What is the name of this process?	5
35	*Attempt either option A or B.* A. The image below shows a banana plant which is growing with the help of suckers. These suckers are small plant stem outgrowths which can be separated from the main plant and planted separately and they will grow into a new plant subsequently.	5

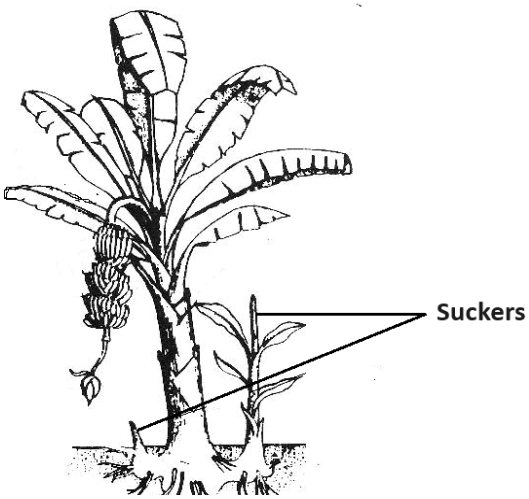

Fig.-1-Parts-of-Banana-plant-FAO-2021.png (623×609) (wp.com)

(i) Give the name and type of reproduction that is shown in the image above. (1)

(ii) List two advantages the farmer will have on using the type of reproduction mentioned above. (2)

(iii) The above plant produces male flowers. Explain how this plant will be involved in the process of pollination. (1)

(iv) Why is the offspring of this banana plant not absolutely identical to its parent plant? (1)

- - - - - - - - - - - - - -

For visually impaired students

A. A banana plant is growing with the help of suckers. These suckers are small plant stem outgrowths which can be separated from the main plant and planted separately and they will grow into a new plant subsequently.

(i) Give the name and type of reproduction. (1)

(ii) List two advantages the farmer will have on using the type of reproduction mentioned above. (2)

(iii) The above plant produces only male flower. Explain how this plant will be involved in the process of pollination. (1)

(iv) Why is the offspring of this banana plant not absolutely identical to its parent plant? (1)

OR

B. The image below shows a developing fetus in the mother's womb. The developing fetus is connected to the placenta by means of umbilical cord. The Umbilical vein and artery run inside the umbilical cord.

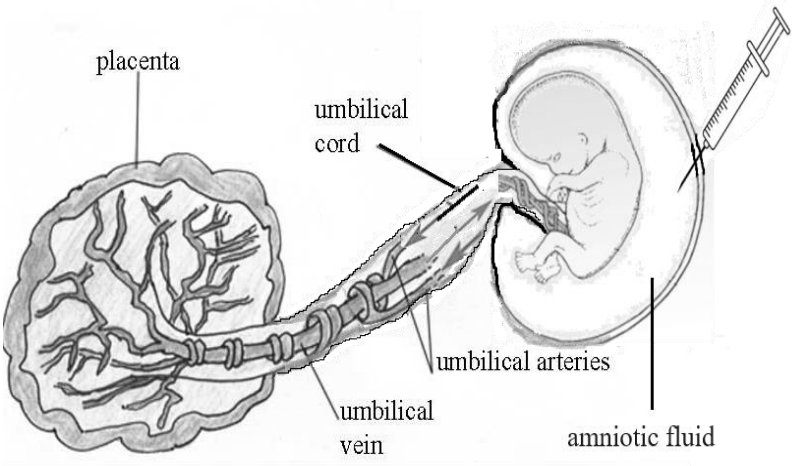

(i) Name two substance that moves through the blood vessels. (1)
(ii) If the placenta has less villi how will it affect the baby's growth? (1)
(iii) Name the region where the embryo develops inside the female body. Explain how this region is adapted for nourishing the baby. (1)
(iv) Some of the fetal cells fall off into the amniotic fluid and can be collected by careful procedure. The cells were screened and found to contain XY chromosome. (2)
a) What is the sex of the foetus?
b) How is this prenatal sex determination misused?

- - - - - - - - - - - - - -

For visually impaired students

B. A developing fetus is connected to the placenta by means of umbilical cord. The Umbilical vein and artery run inside the umbilical cord.
(i) Name two substance that moves through the blood vessels. (1)
(ii) If the placenta has less villi how will it affect the baby's growth? (1)
(iii) Name the region where the embryo develops inside the female body. Explain how this region is adapted for nourishing the baby. (1)
(iv) Some of the fetal cells fall off into the amniotic fluid and can be collected by careful procedure. The cells were screened and found to contain XY chromosome.
a) What is the sex of the foetus?
b) How is this prenatal sex determination misused? (2)

36	*Attempt either option A or B.* A. 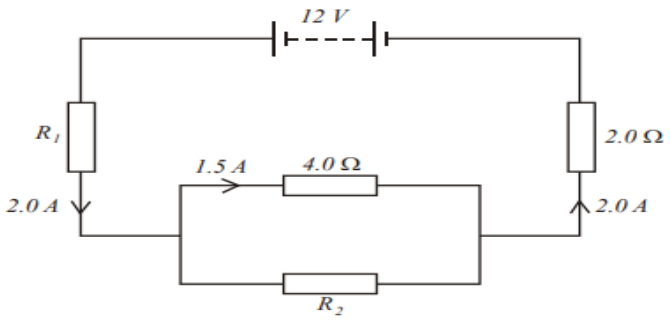 	5

The above circuit is a part of an electrical device. Use the information given in the question to calculate the following.

(i) Potential Difference across R_2.
(ii) Value of the resistance R_2.
(iii) Value of resistance R_1

OR

B.

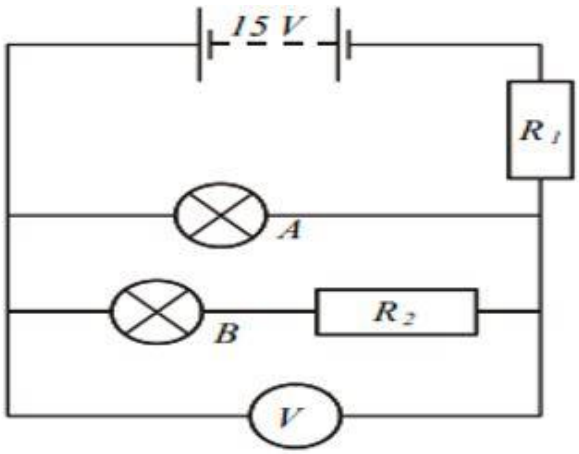

As shown in the figure above A and B are two lamps. Lamp A is rated at 12 V, 24W. Lamp B is rated at 6.0 V. When lamp B operates at its rated voltage, the current in it is 3.0 A. The values of R_1 and R_2 are chosen so that both lamps operate at their rated voltages.

Based on the information given, answer the following.

(i) Calculate the current in Lamp A.
(ii) State and give reason for the reading of the Voltmeter.
(iii) Calculate the resistance of R_2.
(iv) Find the value of the resistance R_1.

- - - - - - - - - - - - - -

For visually impaired students

A.

(i) State the law and write the formula connecting the electric current flowing through a conductor and voltage applied across it.
(ii) In a household five fans each of 100W are used for 4 hours and an electric press of 500W for 2 hours every day. Calculate the cost of using the fans and electric press for 60 days if the cost of 1 unit of electrical energy is Rs. 6.5.

OR

B.

(i) State Joules law of heating and write its mathematical expression.
(ii) Two resistors of resistances 2Ω and 4Ω are connected in
   a) series
   b) parallel

   with a battery of given potential difference. Compute the ratio of total quantity of heat produced in the combination in the two cases if the total voltage and time are kept the same for both.

Section – E

Question No. 37 to 39 are case-based/data -based questions.

37	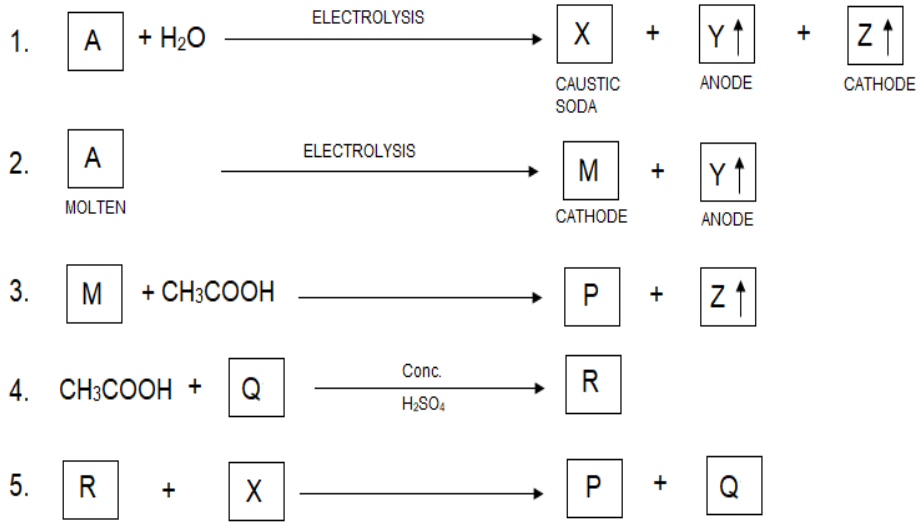 A. Derive the names of A, Y, Z, M, P & R *Attempt either subpart B or C.* B. Improvise an activity to test Z. **OR** C. Name the process in which compounds X, Y & Z are formed from A. Justify your response. - - - - - - - - - - - - - - *For visually impaired students* A. Distinguish between ethanol and ethanoic acid experimentally. *Attempt either subpart B or C.* B. Give the IUPAC name of the first member of Alkene which is formed by addition of conc. sulphuric acid to it. Illustrate the change with the help of a chemical equation. **OR** C. "All combustion reactions are oxidation but all oxidation reactions are not combustion." Justify.	4
38	Mohan and Rohit observed that shoots of a plant growing in shade bend towards the sunlight. Whereas, leaves of 'Touch me not' plant fold and droop soon after touching. They were curious to know how these movements occur in plants.	4

A. Shoots of a plant bending towards light

B. Folding of leaves Touch me not plant

In order to help them understand the movements in the plants, answer the following questions:

Attempt either subpart A or B.

A. What causes the bending of shoots in the plants as shown in figure A?

OR

B. What causes the folding of the leaves in 'Touch me not' plant as shown in figure B? (2)

C. Compare the movement of growth of the pollen tube towards ovule with the movements shown in part A of the above figure. (1)

D. Compare the movement shown in figure B with the movement of body parts in the animals. (1)

- - - - - - - - - - - - - -

For visually impaired students

During a field trip, Mohan and Rohit observed that shoots of sunflower plants bend towards the sunlight. Whereas, leaves of 'Touch me not' plant begin to fold and droop soon after touching even during the day. They were curious to know how these movements occur in plants.

Attempt either subpart A or B.

A. What causes the bending of shoots in the sunflower plants towards sunlight?

OR

B. What causes the folding of the leaves in 'Touch me not' plants when touched by hand? (2)

	C. Compare the movement of growth of the pollen tube towards ovule with the bending of shoots of sunflower plant towards sunlight. (1) D. Compare the movement in folding of leaves of 'Touch me not' plants with the movement of body parts in the animals. (1)	
39	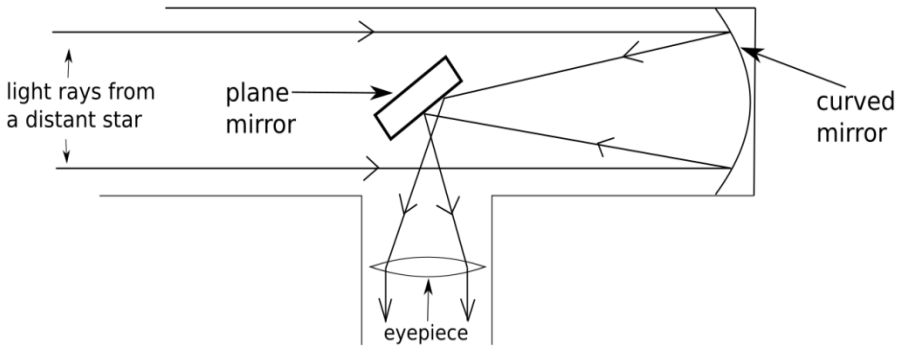 The above image is that of a reflecting telescope. Reflecting telescopes revolutionised our ways of looking into the sky. They employ mirrors to gather and focus light, rather than relying solely on lenses as in their refracting counterparts. These telescopes utilise precisely shaped and polished mirrors to capture incoming light and reflect it to a focal point, where it forms an image for observation. A. What kind of image of the star is seen by the observer at the eyepiece? B. What kind of mirror is used in this reflecting telescope? *Attempt either subpart C or D.* C. Explain with reason what kind of optical device (type of lens or mirror) that is used at the eyepiece. **OR** D. What is the role of the plane mirror in the telescope? - - - - - - - - - - - - - - *For visually impaired students* Azim Taraporewala was a traveller and science enthusiast. During one of his travels he found himself on the edge of an island without any mode of communication. As he had read in many stories, he thought he would light a fire on the beach and travelling boats or ships could see that fire and come to give him a ride. He had run out of lighters and match-sticks but had a reading glass. Being a science enthusiast he knew some tricks and used that lens and a scrap of paper to light a fire, with the help of scorching rays from the sun. A. Which lens can be used by Azim to create the fire? B. What property of the lens helps Azim to create the fire? *Attempt either subpart C or D.* C. List two more uses of this kind of lens. **OR**	4

	D. Explain with reason the condition under which the lens can form both real as well as virtual images.	

****

SOCIAL SCIENCE (CODE 087)
SAMPLE QUESTION PAPER
CLASS X – 2024-25

Time Allowed: 3 Hours **Maximum Marks: 80**

General Instructions:

1. The question paper comprises Six Sections – A, B, C, D, E and F. There are 37 questions in the Question paper. All questions are compulsory.

2. Section A – From questions 1 to 20 are MCQs of 1 mark each.

3. Section B – Question no. 21 to 24 are Very Short Answer Type Questions, carrying 2 marks each. Answer to each question should not exceed 40 words.

4. Section C contains Q.25to Q.29 are Short Answer Type Questions, carrying 3 marks each. Answer to each question should not exceed 60 words.

5. Section D – Question no. 30 to 33 are long answer type questions, carrying 5 marks each. Answer to each question should not exceed 120 words.

6. Section-E - Questions no from 34 to 36 are case based questions with three sub questions and are of 4 marks each. Answer to each question should not exceed 100 words.

7. Section F – Question no. 37 is map based, carrying 5 marks with two parts, 37a from History (2 marks) and 37b from Geography (3 marks).

8. There is no overall choice in the question paper. However, an internal choice has been provided in few questions. Only one of the choices in such questions must be attempted.

9. A separate question has been provided for visually impaired candidates in lieu of questions having visual inputs, maps etc. Such questions are to be attempted by Visually impaired students only. In addition to this, separate instructions are given with each section and question, wherever necessary.

SECTION A

MCQs (20x1=20)

1. Why did nationalists in late-nineteenth-century India focus on recording and preserving folklore? 1

(A) To create new forms of artistic expression that reflected modern India.
(B) To restore a sense of pride in traditional culture and national identity
(C) To use folklore as a tool for economic development and modernization.
(D) To promote a uniform culture that could be adopted across all Indian regions.

2. Interpret the following pie diagram and choose the correct option for the following question? 1

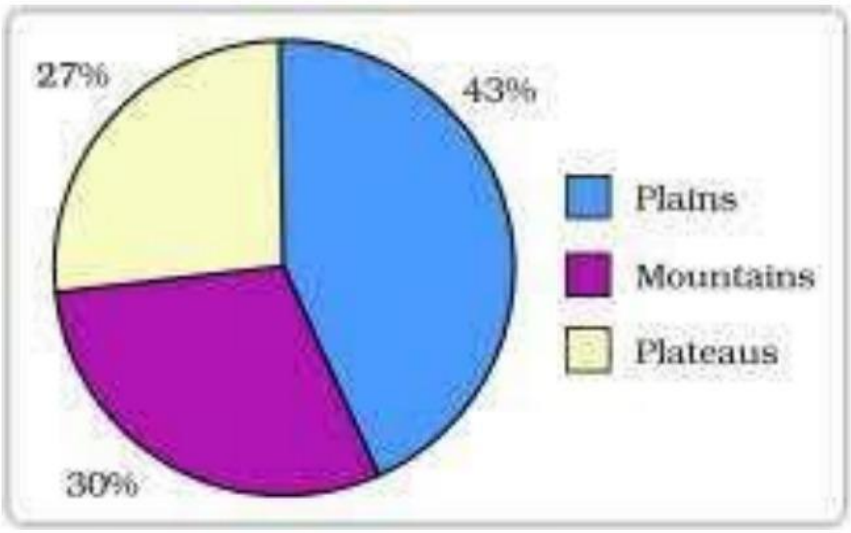

What is the significance of 43 percent land under plains?

(A) It provides facilities for agriculture and industry.
(B) It provides facilities for tourism.
(C) It ensures perennial flow of some river.
(D) It possesses rich reserves of minerals, fossil fuels and forests.

Note: The following question is for Visually Impaired Candidates only in lieu of Q. No. 2.

Transformation of things available in our environment involves an interactive relationship between ……. Choose the correct option from below.

(A) Nature and technology
(B) Nature, technology, and institutions
(C) Nature and institutions
(D) Environment and human beings

3. Read the data given below and answer the question. 1

State	***Infant mortality rate per 1000 live births(2018)***	***Literacy rate% (2017-18)***
A	***30***	***82***
B	***7***	***94***

As per the data given above, why state B has a low infant mortality rate?

(A) It has high per capita income.
(B) It has better infrastructure than state A
(C) It has good teachers and schools.
(D) It has health care and education for all.

4. Match list I and II and select the correct answer using the codes below in the lists: 1

List I	List II
1. Reserved Forests	a. North Eastern States
2. Protected Forests	b. Andhra Pradesh
3. Unclassed Forests	c. Haryana

Options:

(A) 1 (a), 2 (b), 3 (c)
(B) 1 (c), 2 (b), 3 (a)
(C) 1 (a), 2 (c), 3 (b)
(D) 1 (b), 2 (c), 3 (a)

5. Conservation of forest is a key to the survival of human mankind. Some of the practices undertaken in India in this direction is Joint Forest Management. Identify the correct information related to Joint Forest Management. 1

1. It involves local communities in the management and restoration of degraded forests.
2. The programme has been in formal existence since 1980.
3. Jharkhand passed the first resolution for Joint Forest Management.
4. The members of local village communities are entitled to intermediary benefits like non timber forest producers.

Options:

(A) 1 and 2 only
(B) 2 and 3 only
(C) 1 and 4 only
(D) 3 and 4 only

6. The people of Belgium have successfully dealt with their country's power sharing problem and is leading a happy and peaceful life. Which route to federation have they opted for? 1

(A) Coming together.
(B) Cooperative Federation
(C) Holding Together
(D) Competitive Federation

7. Match list I with list II and select the correct answer using the codes below in the lists: 1

List I	List II
1. Ethnic	a. Either only one or two level government
2.Majoritrianism	b. a violent conflict opposing groups within a country
3.Civil war	c. Belief that the majority community should be able to rule a country
4.Unitary system	d. a social division based on culture

(A) 1.d), 2.a), 3. c), 4. b)
(B) 1.b), 2.d), 3. a), 4. c)
(C) 1.c), 2.a), 3. b), 4. d)
(D) 1.d), 2.c), 3. b), 4. a)

8. Mr. X has taken credit to make candles during the festive season. Choose the correct options that defines the importance of credit from the given options: 1

i. it plays a vital and positive role in meeting his target and accelerating his income
ii. the credit helps him to meet the ongoing expenses of production
iii. the credit helps him complete the production on time
iv. it helps him in exercising restraint and get into the habit of taking more credit

(A) Only 4
(B) 3 and 4
(C) 1, 2 and 3
(D) Only 2

9. The North-eastern States of India like Nagaland, Mizoram, Arunachal Pradesh enjoys special status in the Constitution of India because: 1

(A) The area has lush green forests.
(B) Literacy rates are very high.
(C) Due to their social and historical circumstances.
(D) As the people speak lot of different languages

10. Napoleon in the given picture is depicted as a postman. What do each letter falling from his bag represent? 1

Source-https://ncert.nic.in/ncerts/l/jess301.pdf

(A) Number of wars he fought
(B) Letters he posted to the monarchs
(C) Territories lost by him
(D) Areas conquered by him

Note: The following question is for Visually Impaired Candidates only in lieu of Q.10

Q. Which of the following symbol does the “broken chains “stand for?
(A) Freedom.
(B) Strength
(C) Willingness to make peace.
(D) Heroism

11. Which of the following factors significantly contribute to the process of globalisation? Select the correct options. 1
1. Expansion of Multinational Corporations (MNCs).
2. Advancements in information and communication technology.
3. Nationalisation and trade barriers.
4. Cross-border movement of people for jobs and education.

Options:
(A) Statements 1 and 2 are appropriate.
(B) Statements 1, 2 and 3 are appropriate.
(C) Statements 2, 3 and 4 are appropriate
(D) Only statement 3 is appropriate

Options:
(A) Statements 1 and 2 are appropriate.
(B) Statements 1, 2 and 3 are appropriate.
(C) Statements 2, 3 and 4 are appropriate
(D) Only statement 3 is appropriate

12. Which of the following statements about Federalism in the Indian Constitution are correct? 1
1. India is declared as a Union of States.
2. Power-sharing between the Union and State governments is a basic feature.
3. The power-sharing arrangement is easy to change.
4. Changes in power-sharing require a 1/3rd majority in both houses of Parliament.

Options
(A) 1 and 2
(B) 2 and 3
(C) 1 and 3
(D) 2 and 4

13. Arrange the following events in the correct chronological order leading up to the Civil Disobedience Movement: 1

1. Boycott of the Simon Commission
2. Poorna Swaraj resolution passed
3. Letter with 11 demands sent to Viceroy Irwin
4. Salt March

Options:

(A) 4, 3, 2, 1
(B) 2, 1, 3, 4
(C) 1, 4, 3, 2
(D) 1, 2, 3, 4

14. In Indian Economy, the three sectors (Primary, Secondary and Tertiary) are interdependent. However, the share of employment in the primary sector remains high. Most appropriate explanation for this could be: 1

I. Government policies preferentially treat the primary sector
II. Indian economy is largely agrarian and majority of population is dependent on agricultur
III. Inadequate service sector jobs force people to continue working in primary sectors
IV. Primary sector provides raw material for the secondary and tertiary sector.

Choose the correct option

(A) Only I and II are true
(B) Only II and III are true
(C) Only III and IV are true
(D) All are true

15 Consider the statements given below and choose the correct answer 1

Statement I. By the 1870s, caricatures and cartoons were being published in Indian journals and newspapers, commenting on social and political issues

Statement II: Some caricatures praised the educated Indians' fascination with Western tastes and clothes, while others were looking forward to social change.

(A) Statement (I) is correct and (II) is incorrect.
(B) Statement (I) is incorrect and (II) is correct.
(C) Both (I) & (II) are incorrect.
(D) Both (I) & (II) are correct

16. The frequent stories of _____ remind us that no system is entirely without shortcomings, even democracies. Identify the issue being referred to from the options given. 1

(A) Poverty
(B) Black Marketing
(C) Terrorism
(D) Corruption

17. Which of the following is the main factor that led to the rise of multiple political parties at the same level in India? 1

(A) A federal political system
(B) Varied economic conditions.
(C) Linguistic and regional diversity
(D) Low levels of literacy and political awareness

18 The result of greater foreign investment and greater foreign trade has been _____across countries. Find the correct option from below. 1

(A) greater bifurcation of production and markets
(B) greater segregation of production and markets
(C) greater differentiation of production and markets
(D) greater integration of production and markets

19 Which of the following is the true meaning of 'Equal treatment of women' as a necessary ingredient of a democratic society? 1

(A) Women are always treated with respect and dignity.
(B) It is now easier for women to legally wage struggle for their rights.
(C) Most societies across the world are now women dominated.
(D) Women are now treated as equals in the political arena.

20 Consider the statements given below and choose the correct answer. 1

Statement I: A communal mindset can lead to efforts to secure political influence for a specific religious group.

Statement II: Members of the majority community may seek to create a separate political entity as a response to such dynamics.

(A) Statement (I) is correct and (II) is incorrect.
(B) Statement (I) is incorrect and (II) is correct
(C) Both (I) & (II) are incorrect
(D) Both (I) & (II) are correct

SECTION B

VERY SHORT ANSWER QUESTION (4x2=8)

21 "Agriculture and industry are not exclusive of each other. They move hand in hand". Justify your answer with examples. 2

22 (A) 'The silk routes are a good example of vibrant pre -modern trade and cultural links between distant parts of the world. 'Substantiate the statement with illustrations. 2

OR

(B) "New crops can significantly impact survival and well-being." Provide evidence to support this statement.

23 India with vast population and diversity represents a classic example of power sharing that exemplifies the very spirit of democracy. Justify the statement. 2

24 "Local Government is an effective way to uphold the democratic principle of decentralization." Justify this statement with valid points. 2

SECTION C
SHORT ANSWER-BASED QUESTIONS (5x3=15)

25 'By the seventeenth century, as urban culture bloomed in China, the uses of print diversified'. Explain the statement by giving suitable examples. 3

26 (A) Mr.Y from a city in India visits a rural area and finds five people working in a small agricultural farm. More than two people are not required to work in the farm and removing the other three will not affect production. How can one solve this problem of underemployment in rural areas? Explain. 3

OR

(B) Sunil and Raman did their graduation from the same college. Sunil got employed in an unorganised sector and was not satisfied whereas Raman got employed in an organised sector and was happy and satisfied. Identify three reasons for Sunil's dissatisfaction as compared to Raman.

27 Define agricultural term used for cultivation of fruits and vegetables? Write its features with reference to India. 3

28 Women empowerment has greatly improved their status in society over the years. Give any three examples to prove the statement. 3

29 Over the forty years between 1973-74 and 2013-14, while production in all the three sectors has increased, it has increased the most in the tertiary sector. As a result, in the year 2013-14, the tertiary sector has emerged as the largest producing sector in India replacing the primary sector. Why do you think tertiary sector has become so popular in India? Support your answer giving any 3 reasons 3

SECTION D

LONG ANSWER-BASED QUESTIONS (4X5=20)

30 (A) Analyse the measures adopted to prevent soil erosion caused due to natural forces. 5

OR

(B) '"Mohan recently bought a farm and wants to grow crops such as sugarcane, cotton, and jowar. He is unfamiliar with the local soil types and climatic conditions." Help him identify the appropriate soil type and its properties for successful farming.

31 (A) 'Romanticism, a cultural movement sought to develop a particular form of nationalist sentiment.' Justify the statement with suitable arguments. 5

OR

(B) 'The Treaty of Vienna depicted the spirit of conservatism.' Substantiate the statement with key features of the treaty.

32 (A) Political parties are a necessary condition for a democracy.' Analyse the statement with relevant points. 5

OR

(B) "Political parties today face several challenges that impact their democratic functioning." Justify this statement.

33 (A) Miss X wants to start a savoury food store in her village. She wants to supplement her income to raise the standard of living of her family. How, do you think, self-help groups can help, support your answer with reasons? 5

OR

(B) Money by providing the crucial intermediate step eliminates the need for double coincidence of wants. Justify the statement highlighting the significance of the modern form of money in India.

SECTION E
CASE-BASED QUESTIONS (3X4=12)

34 **Read the source given below and answer the questions that follow:** 1+2+1

Emboldened with this success, Gandhi ji in 1919 decided to launch a nationwide *Satyagraha* against the proposed Rowlatt Act (1919). This Act had been hurriedly passed through the Imperial Legislative Council despite the united opposition of the Indian members. It gave the government enormous powers to repress political activities, and allowed detention of political prisoners without trial for two years. Mahatma Gandhi wanted non-violent civil disobedience against such unjust laws, which would start with a *harta*l on 6 April.

i. Why did the British introduce the Rowlatt Act?
ii. Examine the effect of this Act on Indians.
iii. How did Mahatma Gandhi respond to the Rowlatt Act? Provide one reason for his reaction.

35 **Read the source given below and answer the questions that follow:** 1+1+2

Given the abundance and renewability of water, it is difficult to imagine that we may suffer from water scarcity. The moment we speak of water shortages; we immediately associate it with regions having low rainfall or those that are drought prone. We instantaneously visualise the deserts of Rajasthan and women balancing many 'matkas' (earthen pots) used for collecting and storing water and travelling long distances to get water. True, the availability of water resources varies over space and time, mainly due to the variations in seasonal and annual

precipitation, but water scarcity in most cases is caused by over-exploitation, excessive use and unequal access to water among different social groups**.**

i. Give any one reason that could contribute to water scarcity in the future?
ii. Why a resident of Rajasthan would choose to install a submersible water pump?
iii. Why is water conservation crucial? Discuss any one key for effective water management and conservation.

36 **Read the source given below and answer the questions that follow:** 1+2+1

HUMAN DEVELOPMENT REPORT Once it is realised that even though the level of income is important, yet it is an inadequate measure of the level of development, we begin to think of other criterion. There could be a long list of such criterion but then it would not be so useful. What we need is a small number of the most important things. Health and education indicators, such as the ones we used in comparison of Kerala and Punjab, are among them. Over the past decade or so, health and education indicators have come to be widely used along with income as a measure of development. For instance, Human Development Report published by UNDP compares countries based on the educational levels of the people, their health status and per capita income. It would be interesting to look at certain relevant data regarding India and its neighbours from Human Development Report 2006.

i. On what basis the UNDP compares countries on Human Development?
ii. Explain Human development briefly.
iii. Mention other aspects that should be considered in measuring human development.

SECTION F
MAP SKILL-BASED QUESTION (2+3=5)

37.a Two places A and B have been marked on the given outline map of India. Identify them and write their correct names on the lines drawn near them. 1+1

A. The place where the Peasant Satyagraha took place.
B. Indian National congress session was held at this place in Sept. 1920.

Note: The following question is for Visually Impaired Candidates only in lieu of Question 37 (a).

A. Name the place where the Peasant Satyagraha took place
B. Name the place where the Indian National Congress session was held in Sept 1920.

37.b On the same outline map of India locate and label **any three** of the following with suitable symbols. 1+1 +1

i. A software Technology Park in Maharashtra.
ii. A coal mine in Jharkhand.
iii. The tallest dam in India.
iv. A seaport located in West Bengal.

Note: The following question is for Visually Impaired Candidates only in lieu of Q. No. 37 (b)

Answer **any three** of the following.

i Name the tallest dam built in India.
ii Name a seaport in west Bengal.
iii Name the coal mine in Jharkhand.
iv Name the Software Technology Park present in the state of Maharashtra

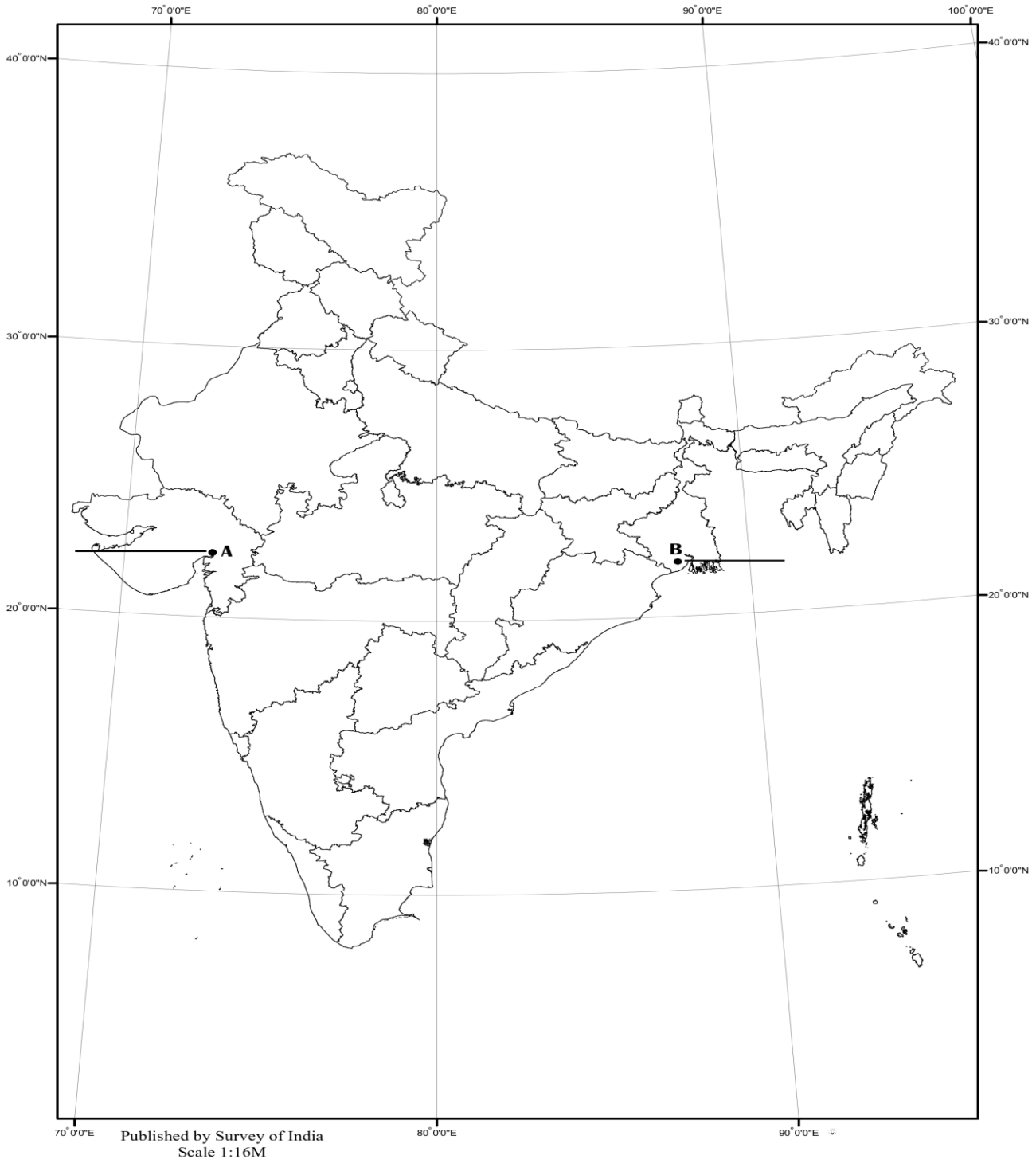

SOURCE_https://www.surveyofindia.gov.in/webroot/UserFiles/files/1_16-state%20boundary.pdf

CBSE | DEPARTMENT OF SKILL EDUCATION

Information Technology (SUBJECT CODE - 402)

Blue-print for Sample Question Paper for Class X (Session 2024-2025)

Max. Time: 2 Hours **Max. Marks: 50**

General Instructions:

1. Please read the instructions carefully.
2. This Question Paper consists of **21 questions** in two sections: Section A & Section B.
3. Section A has Objective type questions whereas Section B contains Subjective type questions.
4. **Out of the given (5 + 16 =) 21 questions, a candidate has to answer (5 + 10 =) 15 questions in the allotted (maximum) time of 2 hours.**
5. All questions of a particular section must be attempted in the correct order.
6. **SECTION A - OBJECTIVE TYPE QUESTIONS (24 MARKS):**
   - **i.** This section has 05 questions.
   - **ii.** Marks allotted are mentioned against each question/part.
   - **iii.** There is no negative marking.
   - **iv.** Do as per the instructions given.
7. **SECTION B – SUBJECTIVE TYPE QUESTIONS (26 MARKS):**
   - **i.** This section has 16 questions.
   - **ii.** A candidate has to do 10 questions.
   - **iii.** Do as per the instructions given.
   - **iv.** Marks allotted are mentioned against each question/part.

SECTION A: OBJECTIVE TYPE QUESTIONS

Q. 1	Answer any 4 out of the given 6 questions on Employability Skills (1 x 4 = 4 marks)	
i.	**Rahul moved to Japan from India for work. However, he struggles to adapt because he is not familiar with Japanese customs and etiquette, which affects his interactions with coworkers. This is an example of:** (a) Interpersonal barrier (b) Cultural barrier (c) Physical barrier (d) Linguistic barrier	**1**
ii.	**Amina studies diligently to improve her grades because she wants to feel proud of her achievements and also earn a scholarship. What type of motivation is this?** (a) Internal (b) External (c) Both internal and external (d) Not any specific type of motivation	**1**
iii.	**Rajesh launches a new app, but it fails to attract users and he faces financial losses. He gathers his team to discuss the failure, takes accountability for the oversight, and assures them that he will conduct thorough market research before the next launch. He _____.** (a) takes responsibility for his mistakes (b) thinks before making a decision (c) does not give up (d) is innovative	**1**
iv.	**Which of the following best describes self-management?** (a) The ability to ignore emotions and focus solely on tasks (b) The ability to control one's emotions, thoughts, and behavior in various situations (c) The ability to manage time efficiently without considering feelings (d) The ability to rely on others for emotional support	**1**
v.	**A community initiates a tree-planting campaign to restore local forests, aiming to enhance biodiversity, prevent soil erosion, and provide habitats for wildlife. This initiative also includes educating residents about sustainable land use practices to protect their natural environment.** **Which SDG can you relate this initiative to?** (a) Clean Water and Sanitation (b) Life on Land (c) Affordable and Clean Energy (d) Climate Action	**1**
vi.	**How can an anti-virus protect your device?** (a) It can protect it from over-heating (b) It can increase its performance (c) It can prevent data from getting corrupt (d) It can backup data	**1**

Q. 2	Answer any 5 out of the given 6 questions (1 x 5 = 5 marks)	
i.	**Which feature in Writer allows you to apply the same style to multiple words scattered throughout the document?** (a) Format Painter (b) Fill Format option (c) Style Inspector (d) Font Adjustment Tool	**1**
ii.	**Which feature allows you to jump to a different document, spreadsheet, or website from within a document?** (a) Bookmark (b) Page Break	**1**

	(c) Hyperlink (d) Format Painter	
iii.	**How many levels of headings does LibreOffice Writer support?** (a) 5 (b) 8 (c) 10 (d) 12	**1**
iv.	**Which of the following is NOT true about templates?** (a) The styles and formatting features can be reused. (b) Libre Office provides online templates (c) Templates can have headings, text formats, styles, page numbers, headers and footers (d) We cannot create our own templates	**1**
v.	**Radha is planning a school event and wants to decide how much money to allocate for different activities, like games, food, and decorations. She creates several different budget plans to see how changing the amount for each category affects the total expenses.** **How can Radha efficiently compare the different budget plans for her school event in the same spreadsheet?** (a) By writing down each budget on paper (b) By using the What-if scenario feature in the spreadsheet to create and analyze different budget options (c) By asking her friends to guess the costs (d) By using the Filter function to look at one category at a time	**1**
vi.	**What is the main goal of applying ergonomics in an office setting?** (a) To increase the amount of work done in a shorter time (b) To design tasks that are more interesting for employees (c) To ensure easy and safe use of equipment, reducing the risk of injury (d) To promote social interactions among employees	**1**

Q. 3	**Answer any 5 out of the given 6 questions (1 x 5 = 5 marks)**	
i.	**The code of macro begins with ____ followed by the name of the macro and ends with ____.** (a) Function, End (b) Sub, End Sub (c) Sub, End Function (d) Sup, End Sup	**1**
ii.	**What is the benefit of inserting an image as a link in a document?** (a) It reduces the document size by storing only the reference to the image. (b) It enhances the image quality. (c) It allows for automatic image editing within the document. (d) It removes the need for image captions.	**1**
iii.	**After incorporating the reviews, Krishna mailed the document to his editor with the Track Changes ON. He made certain changes in the document. Pradeep wants to compare his original document with the reviewed document.** **What is the first step Krishna should take to compare his edited document with the original document?** (a) Open the Manage Changes dialog box. (b) Select Edit > Track Changes > Compare Documents option. (c) Save the edited file. (d) Accept or reject the desired changes.	**1**
iv.	**It allows the placement of image in relation to text** (a) Water mark (b) Trade mark (c) Copyright (d) Text Wrapping	**1**
v.	**What is the primary function of the Subtotal tool in Calc?** (a) It creates a chart for the data. (b) It automatically groups data and applies common functions like sum and average.	**1**

	(c) It highlights cells with conditional formatting. (d) It removes duplicate data from the spreadsheet.	
vi.	**What is one way to mitigate hazards associated with prolonged computer use?** (a) Increasing screen brightness (b) Stretching at regular intervals or doing simple yoga (c) Using a smaller screen (d) Sitting in a fixed position	**1**

Q. 4	**Answer any 5 out of the given 6 questions (1 x 5 = 5 marks)**	
i.	A _____ hyperlink stores the location with respect to the current location **in LibreOffice Calc.** (a) Absolute (b) Relative (c) Mixed (d) Reference	**1**
ii.	_____ **is a text editor that allows you to create and edit macros.** (a) IDE (b) Notepad (c) Open Office Writer (d) MS Word	**1**
iii.	**Which of the following best defines "information"?** (a) Unprocessed raw facts such as names, marks, and addresses. (b) Organized and processed data that provides meaningful insights. (c) Audio, video, and graphics stored without any processing. (d) A collection of unrelated raw facts.	**1**
iv.	**What does referential integrity in a database ensure?** (a) All primary keys are unique across the database. (b) All records in a table must have a value in every column. (c) Every foreign key value must match a primary key in the referenced table or be null. (d) Data can be freely deleted from any table without constraints.	**1**
v.	**What should you do with the problem of dry eyes?** (a) Forget to blink (b) Rest eyes periodically and do simple eye exercises (c) Do exercise (d) Blink the eyes	**1**
vi.	**Which of the following data models sets a relation between the two or more tables?** (a) Relational Data Model (b) Network Data Model (c) Hierarchical Data Model (d) Connection Data Model	**1**

Q. 5	**Answer any 5 out of the given 6 questions (1 x 5 = 5 marks)**	
i.	**Which of the following statements are true about primary key in a database?** (a) It is a field that can have duplicate values. (b) It uniquely identifies each record in a table. (c) It can have null values (d) It is an optional field in a database table.	**1**
ii.	**Which of the following dialog boxes appears when the Query Design window is opened for the first time to design a query?** (a) Add Table (b) Add Query (c) Add Query or Report (d) Add Table or Query	**1**

iii.	**What feature in OpenOffice Base allows users to present retrieved data in a user-friendly and formatted manner?** (a) Query (b) Form (c) Report (d) Data view	**1**
iv.	**Which of the following is a recommended way to manage stress at work?** (a) Engage in aggressive conflicts with colleagues (b) Work longer hours without breaks (c) Seek conflict resolution strategies with colleagues (d) Avoid hobbies that promote relaxation	**1**
v.	**Which of the following can lead to musculoskeletal problems while working on a computer?** (a) Using anti glare screen (b) Sitting in a wrong posture and using an uncomfortable chair (c) Using Air Conditioners (d) Taking frequent breaks	**1**
vi.	**In a situation where a small fire breaks out in the office, what should you use to address the emergency?** (a) A Blanket (b) A Fire Extinguisher (c) A Towel (d) Baking Soda	**1**

SECTION B: SUBJECTIVE TYPE QUESTIONS

Answer any 3 out of the given 5 questions on Employability Skills (2 x 3 = 6 marks)
Answer each question in 20 – 30 words.

Q. 6	During a team meeting, Sarah is explaining a complex project idea to her colleagues. She speaks too quickly, uses jargon, and doesn't pause for questions. As a result, her team seems confused, and the project isn't fully understood. What can Sarah do to improve her verbal communication skills?	**2**
Q. 7	What are the functions of Entrepreneurs?	**2**
Q. 8	List the various ways you can use to protect your data.	**2**
Q. 9	Riya, a Class X student, feels stressed with her exam preparation, extracurricular activities, and family commitments. How can tracking time help her?	**2**
Q. 10	Why has United Nations has made the 17 Sustainable Development Goals?	**2**

Answer any 4 out of the given 6 questions in 20 – 30 words each (2 x 4 = 8 marks)

Q. 11	In Open Office Writer, what are the styles? List two Open Office Writer style options.	**2**
Q. 12	Differentiate between safety and security of an employee.	**2**
Q. 13	What are the benefits of sharing a spreadsheet?	**2**
Q. 14	Guneet has completed his assessments in four subjects and received the following marks: 75 in Math, 68 in Science, 82 in English, and 70 in History. The student needs to achieve an overall aggregate of 75% across all five subjects to meet his academic goals. He still has to take the exam in the fifth subject, which is Geography. Which Calc tool and menu option he can use to check how many marks he has to score in the 5th subject to get the required percentage?	**2**
Q. 15	In a database, why is it important to create relationships between the tables?	**2**
Q. 16	What is Occupational Overuse Syndrome? What are the causes for it?	**2**

Answer any 3 out of the given 5 questions in 50– 80 words each (4 x 3 = 12 marks)

Q. 17	A team of writers is collaborating on a report using a word processing software with a Track Changes feature. One writer creates the initial draft, which then needs to be reviewed and edited by the rest of the team. a) Why is the Track Changes feature essential for collaborative document editing? b) Which menu option can be used to access this feature? c) Can reviewers add comments? d) Once the changes are made by all the reviewers, who can accept or reject them?	**4**
Q. 18	A Class X student is participating in a school competition where they need to analyse the performance of different sports teams based on match scores and statistics. The student has collected data over several matches and needs to calculate averages, determine rankings, and generate charts for a presentation. a) How are Macros in Calc helpful to him? b) How to enable Macro in Calc? c) Is solution*word a valid macro name? Justify d) Mention any one operation which cannot be recorded by macro.	**4**

Q. 19	A health clinic is developing a patient management system to streamline patient intake, appointments, and medical records. They need to implement forms for various purposes, including new patient registration, appointment scheduling, and updating medical histories. a) What is the use of form in DBMS? b) What are the different ways to create forms in DBMS? c) Where can we find various tools to add or edit controls on the form? d) What is the use of the Records Toolbar in a form?	**4**
Q. 20	What points should be included in Fire Prevention Plan in the office?	**4**
Q. 21	Your cousin runs a small bookstore and wants to maintain an inventory of books. He needs to record information such as book titles, authors, ISBNs, publication dates, prices, and stock levels. However, he is not familiar with database management systems. Explain the following concepts to help him understand DBMS: a) What is DBMS? b) What are the advantages of using DBMS? c) Name any two database programs that can be used to create a table and store the data according to his requirements. d) Which field can be set as a Primary Key?	**4**